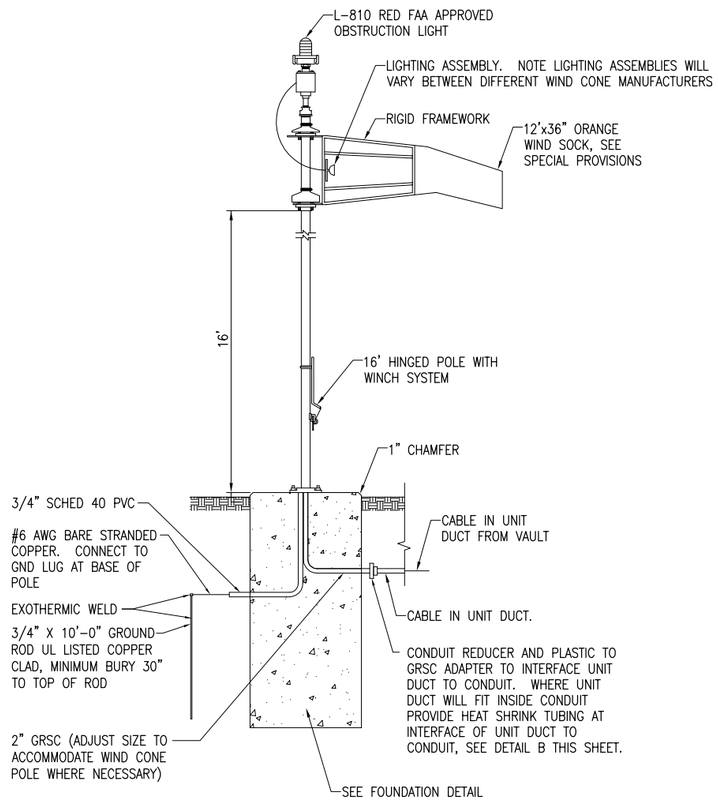

LIGHTED L-807 WIND CONE

NOT TO SCALE

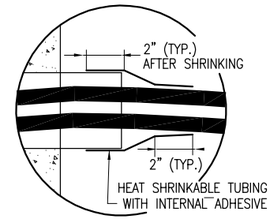

DETAIL B

NOT TO SCALE

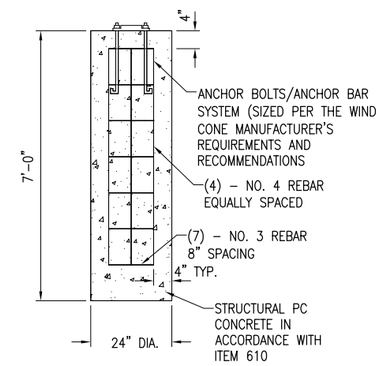

FOUNDATION DETAIL

NOT TO SCALE

NOTES

1. WIND CONE SHALL BE FAA APPROVED L-807, LIGHTED, SIZE 2 WITH ORANGE WIND SOCK, 120 VAC, & WITH L-810 RED LED TYPE OBSTRUCTION LIGHT, SEE SPECIAL PROVISION SPECS.
2. L-807 WIND CONE-12' LIGHTED WILL BE PAID FOR UNDER ITEM AT107712.
3. REBAR SHALL BE MANUFACTURED FROM 100% DOMESTIC STEEL.

ITEM AT107712 L-807 WIND CONE-12' LIGHTED IS UNDER ADDITIVE ALTERNATE NO. 1.

REVISION	DATE

EDGAR COUNTY AIRPORT
PARIS, ILLINOIS

IL PROJ.: PRG-4018 A.I.P. PROJ.: 3-17-0077-B13

Hanson Proj. No. 10A0053
Filename E-504.DWG
Scale NONE
Date 03/10/11

LAYOUT	KNL	01/06/11
DRAWN	MLH	01/11/11
REVIEWED	CAH	02/04/11

HANSON

© Copyright Hanson Professional Services Inc. 2011

Hanson Professional Services Inc.
1525 South Sixth Street
Springfield, Illinois 62703-2886
www.hanson-inc.com
Offices Nationwide

CONSTRUCT CROSSWIND RUNWAY 18-36

L-807 WIND CONE DETAIL

MAR 11, 2011 11:08 AM RINKE00461 C:\PWISE_WORK\DO_NOT_DELETE\DMS18063\E-504.DWG