F.A.P. RTE.	SECTION	COUNTY	TOTAL SHEETS	SHEET NO.
301	177-2 (-1A, B-1, VB-1)	STEPHENSON	386	18
STA.	TO STA.			
FED. ROAD DIST. NO.	ILLINOIS	FED. AID PROJECT		

P-92-029-02
CONTRACT# 64799

TYP-4 OF 9

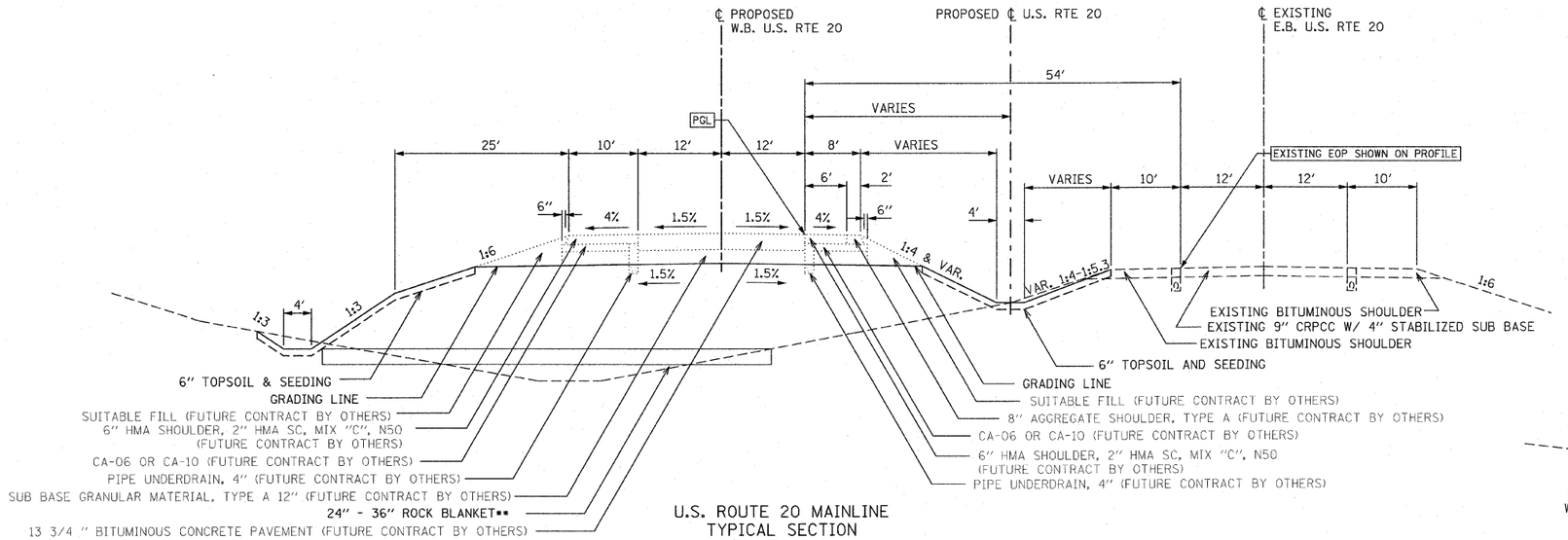

U.S. ROUTE 20 MAINLINE
TYPICAL SECTION
(NORMAL)
STA. 534+75.00 TO STA. 536+80.25
STA. 544+38.20 TO STA. 559+00.00

** ROCK BLANKET
(QUARRY RUN GRANULAR EMBANKMENT)

	DEPTH
STA. 534+75 TO 537+00	36" ROCK BLANKET
STA. 544+40 TO 558+00	36" ROCK BLANKET

*** ROCK KEYWAY
(QUARRY RUN GRANULAR EMBANKMENT)

STA. 558+00 TO 559+00	TAPER TO ROCK KEYWAY EXCAVATION OF 10' DEPTH AND 20' WIDTH WITH 1:1 SIDESLOPES
STA. 559+00 TO 566+00	TAPER TO 10' X 20' ROCK KEYWAY TO A 14' DEEP AND 35' WIDE KEYWAY WITH 1:1 SIDESLOPES
STA. 566+00 TO 570+00	14' DEEP AND 35' WIDE ROCK KEYWAY WITH 1:1 SIDESLOPES

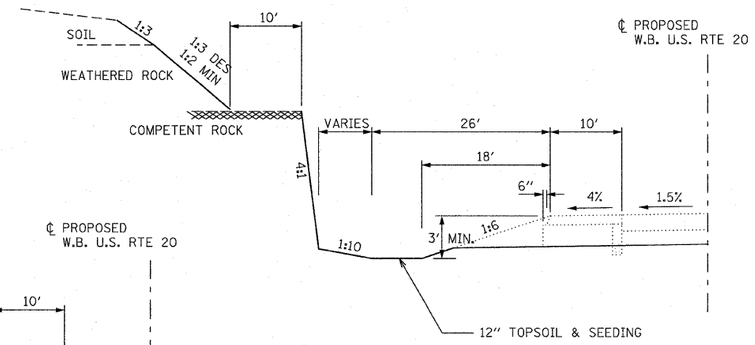

U.S. ROUTE 20 MAINLINE
TYPICAL ROCK CUT SECTION
STA. 634+00.00 TO STA. 638+00.00

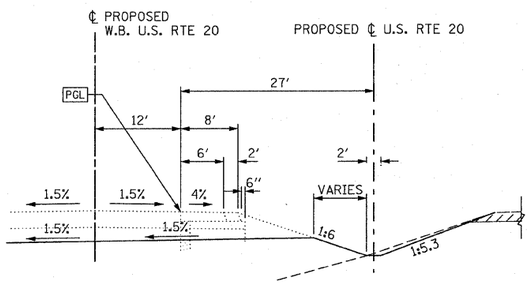

U.S. ROUTE 20 MAINLINE TYPICAL SECTION
TEMPORARY BERM TO MAINTAIN MEDIAN DITCH
STA. 486+00 TO STA. 491+00
STA. 499+50 TO STA. 502+50
STA. 520+00 TO STA. 521+50

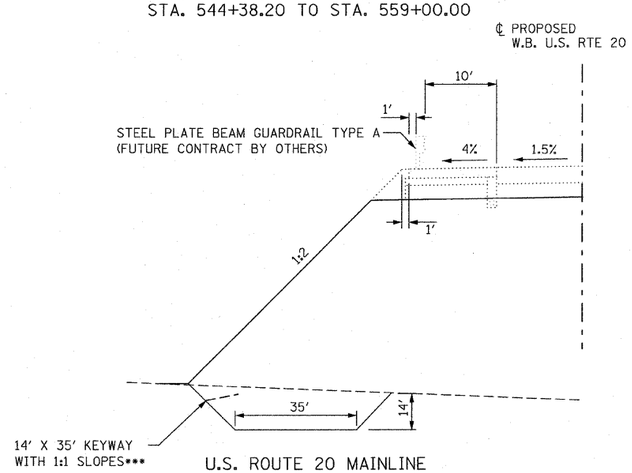

U.S. ROUTE 20 MAINLINE
TYPICAL HIGH FILL SECTION
(FILL HEIGHT > 30' AND USED TO MINIMIZE WETLAND IMPACTS)
STA. 544+38.20 TO STA. 576+00

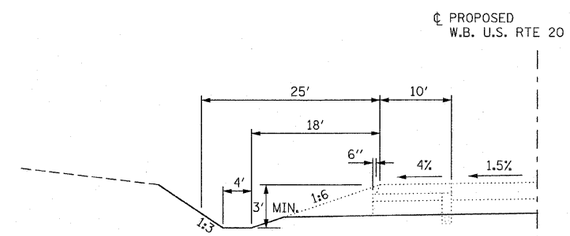

U.S. ROUTE 20 MAINLINE
TYPICAL CUT SECTION
STA. 503+00.00 TO STA. 507+00.00
STA. 576+00.00 TO STA. 585+00.00

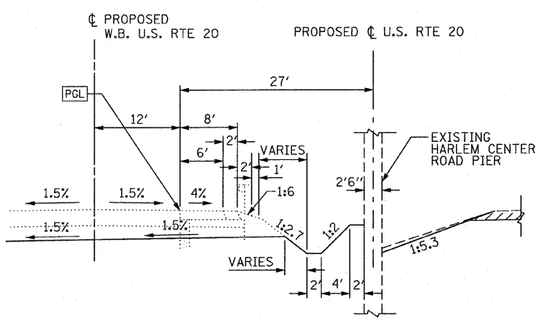

U.S. ROUTE 20 MAINLINE TYPICAL SECTION
SPECIAL DITCH AROUND HARLEM CENTER ROAD PIER
STA. 504+46.42 TO STA. 505+83.68

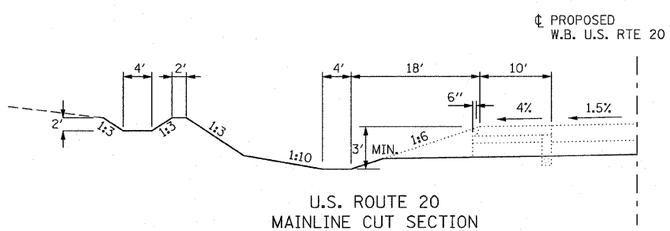

U.S. ROUTE 20
MAINLINE CUT SECTION
(EXTRA EXCAVATION MATERIAL AND
DIVERSION DITCH AT TOP OF SLOPE)
STA. 490+00.00 TO STA. 502+00.00

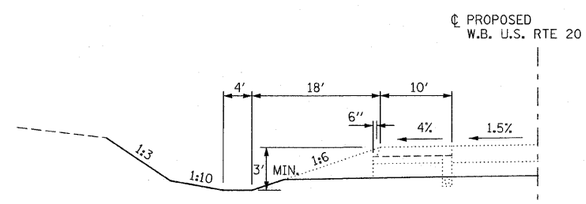

U.S. ROUTE 20 MAINLINE
CUT SECTION
(EXTRA EXCAVATION MATERIAL)
STA. 478+00.00 TO STA. 490+00.00
STA. 507+00.00 TO STA. 512+00.00
STA. 519+00.00 TO STA. 530+00.00
STA. 604+00.00 TO STA. 634+00.00

NOTES:
1. IF ROCK CUT IS GREATER THAN 8 FOOT HEIGHT, A 10 FOOT BENCH IS REQUIRED AT THE TOP
2. IF ROCK CUT EXCEEDS 20 FOOT HEIGHT, A 10 FOOT BENCH IS REQUIRED AT 1/2 THE TOTAL HEIGHT, IN ADDITION TO THE BENCH AT THE TOP
3. WEIGHT OF BITUMINOUS MATERIAL = 112 LBS/IN/SY.
4. A 6" LAYER OF TOPSOIL W/ SEEDING SHALL BEPLACED ALONG THE TOP OF THE GRADED EMBANKMENT.

PARSONS BRINCKERHOFF

REVISIONS	
NAME	DATE

ILLINOIS DEPARTMENT OF TRANSPORTATION
F.A.P. ROUTE 301 (US RTE. 20)
FROM BOLTON ROAD TO WEST OF IL RTE. 26

TYPICAL SECTIONS
U.S. 20 MAINLINE

SCALE: NONE
DATE: 01-22-10
DRAWN BY SJV
CHECKED BY RMH