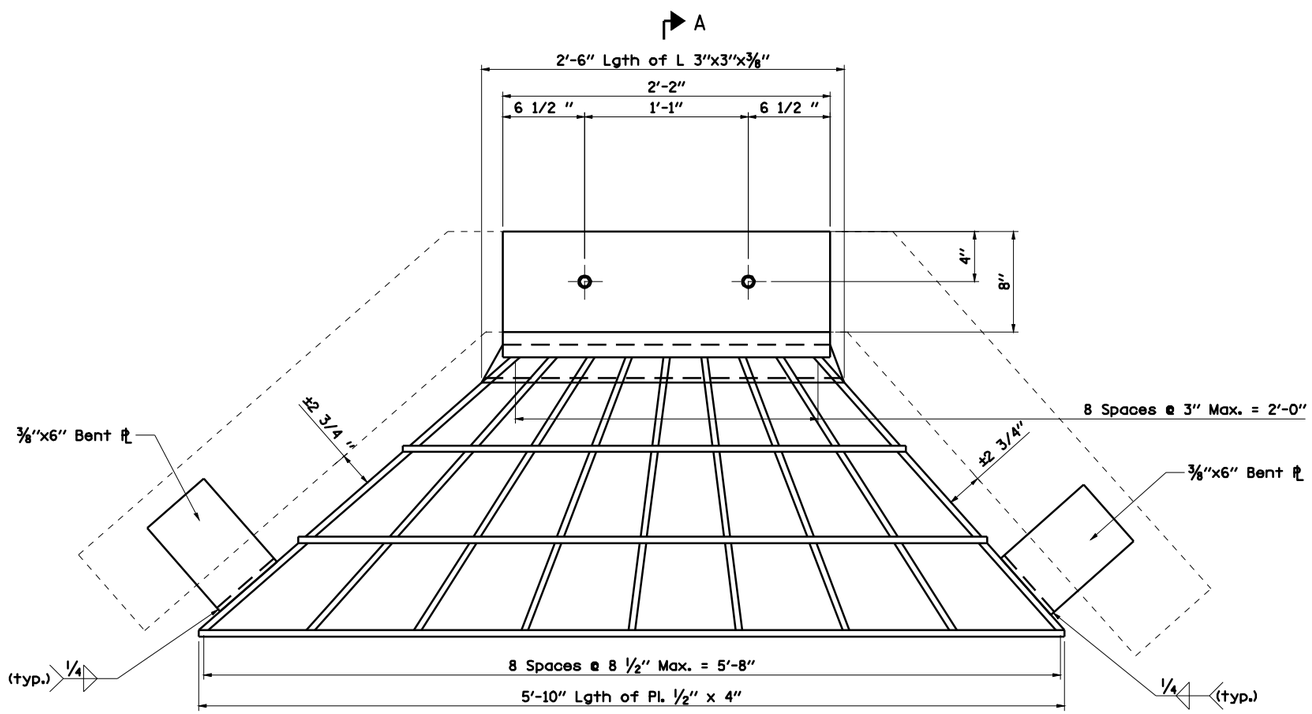

PLAN

Quantity of steel = 180 lbs.

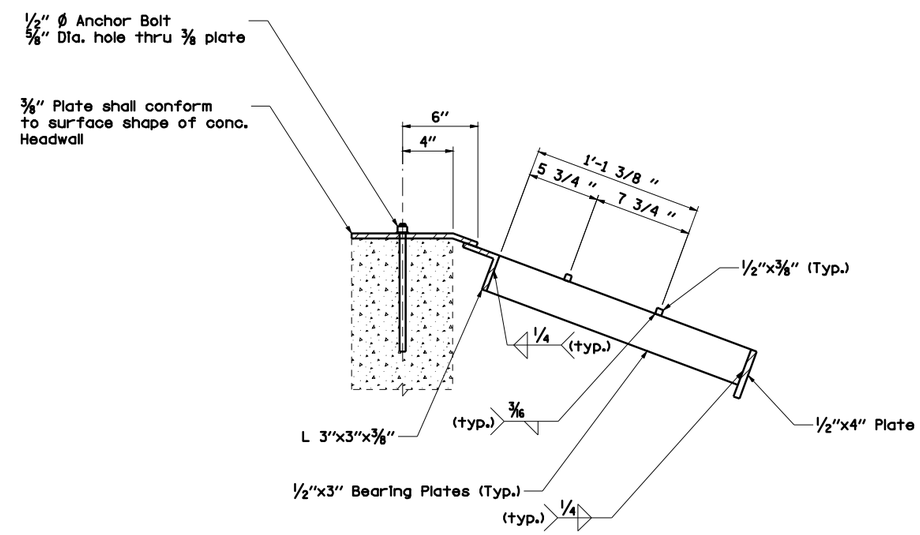

SECTION A-A

GENERAL NOTES

Approximate quantity of steel shown includes total quantity of grating, bolts, nuts, washers and steel pipe.

1/2" Anchor Bolts drilled & grouted to manufacturer's specifications

Fabricator to field verify headwall dimensions to ensure proper fit.

GREENTEC & BRADFORD, INC.
CONSULTING ENGINEERS
PROFESSIONAL DESIGN FIRM NO. 184-001007
PROFESSIONAL DESIGN FIRM NO. 184-001007
1011 TRI-PLEX DRIVE, SPRINGFIELD, ILLINOIS 62703
(217) 793-3944, (217) 793-3427 (FX), E-MAIL: <info@greentecandbradford.com>

FILE NAME = c:\pw_work\PWIDOT\LAUGHLINRL\d0187893\D900709-Sht-Details2.dgn	USER NAME = laughlinrl	DESIGNED - WCB	REVISED -	STATE OF ILLINOIS DEPARTMENT OF TRANSPORTATION	GRATING SPECIAL DETAILS	F.A.P RTE.	SECTION	COUNTY	TOTAL SHEETS / SHEET NO.
	PLOT SCALE = 2.0034 ' / IN.	DRAWN - FAV	REVISED -			753	141RS-6&142RS-6	SANGAMON	62 / 62F
	PLOT DATE = Mar-01-2010 08:55:09AM	CHECKED - MDS/JLG	REVISED -					CONTRACT NO. 72B13	
G&B PROJECT: 09007.09		DATE - 02/19/09	REVISED -		SCALE: N.T.S. / SHEET NO. 1 OF 1 SHEETS / STA. TO STA.	FED. ROAD DIST. NO.	ILLINOIS	FED. AID PROJECT	

PLOT DRIVER = $PLOTTER$