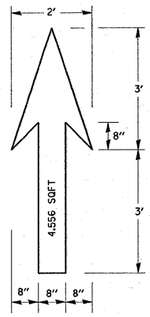

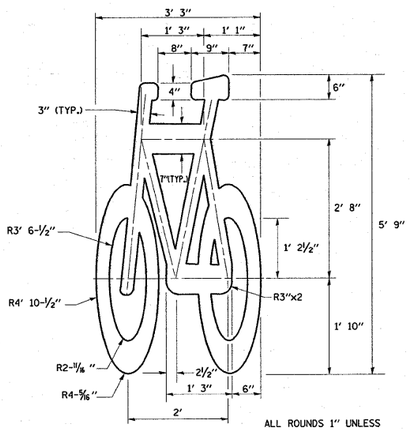

ALL ROUNDS 1" UNLESS OTHERWISE NOTED.

BICYCLE LANE SYMBOL

NOTE:

1.) FOR BIKE LANE SYMBOLS ONLY, USE PRE-FORMED THERMOPLASTIC WITH A MINIMUM THICKNESS OF 90 MILS, MINIMUM SKID RESISTANCE VALUE OF 60 BPN, & A MINIMUM INDEX OF REFRACTION OF 1.50.

2.) THE RESIDENT ENGINEER SHALL CONTACT MR. BEN GOMBERG AT 312-744-8093 AT LEAST ONE CALENDAR WEEK PRIOR TO INSTALLING BIKE LANE SYMBOLS.

TYPICAL BIKE LANE SYMBOLS

DRAWING #28

DRAWING #29

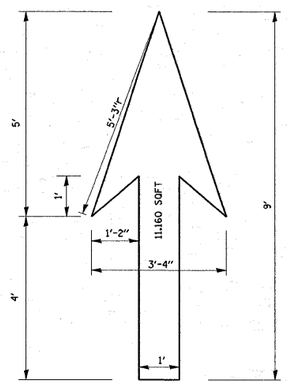

DRAWING #30

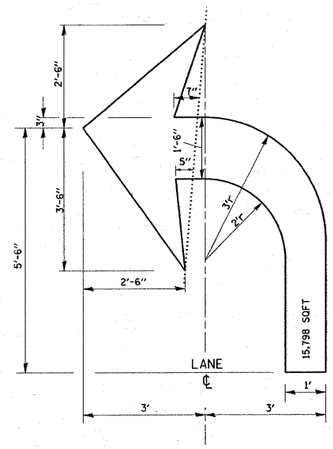

DRAWING #31

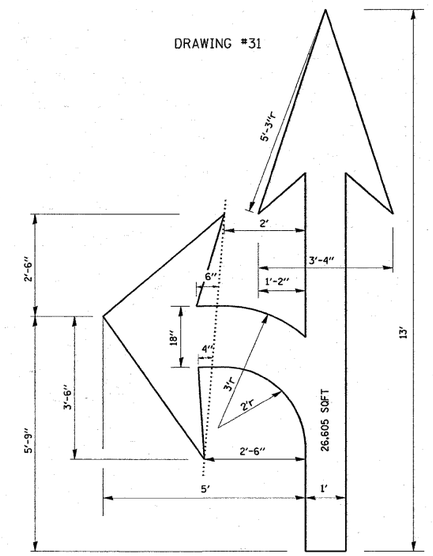

DRAWING #32

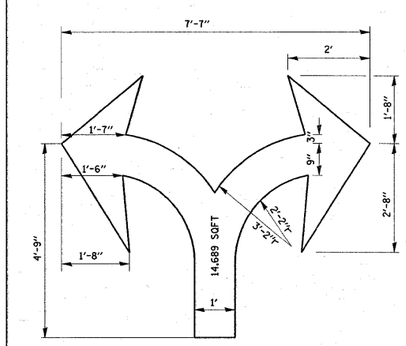

DRAWING #33

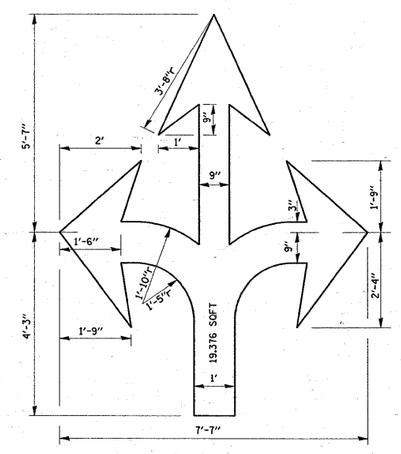

DRAWING #34

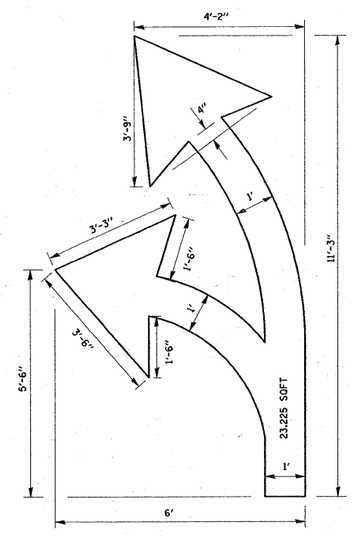

DRAWING #35

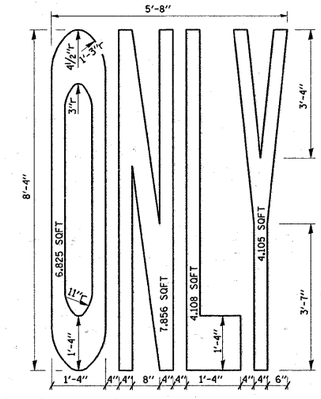

NOTE:

ALL MARKINGS SHALL BE SOLID WHITE UNLESS OTHERWISE NOTED IN THE PLANS

FILE NAME = P:\Dtail-Brainerdl\tc24.dgn	USER NAME = shiranisb	DESIGNED -	REVISED -T. RAMMACHER 12-07-00	STATE OF ILLINOIS DEPARTMENT OF TRANSPORTATION	CITY OF CHICAGO TYPICAL PAVEMENT MARKINGS	F.A.U. RTE.	SECTION	COUNTY	TOTAL SHEETS	SHEET NO.
		DRAWN -	REVISED -			3592	(0707, 0707.1 & 0708)	COOK	19	19
	PLOT SCALE = 50.000 ' / IN.	CHECKED -	REVISED -			TC-24		CONTRACT NO. 62405		
	PLOT DATE = 3/7/2009	DATE -	REVISED -		SCALE: NONE SHEET NO. 2 OF 2 SHEETS STA. TO STA.	FED. ROAD DIST. NO. 1	ILLINOIS	FED. AID PROJECT		