CONTRACT NO. 70113

F.A.P. RTE.	SECTION	COUNTY	TOTAL SHEETS	SHEET NO.
323	(149,150)RS-3	EDGAR	83	9

EXISTING TYPICAL CROSS SECTION

STATION	TO	STATION
1687+00.00		1782+90.00
1788+50.00		1792+41.35
1828+50.35		1943+00.00
1947+59.50		2025+28.50
2031+10.00	℄	2081+75.87

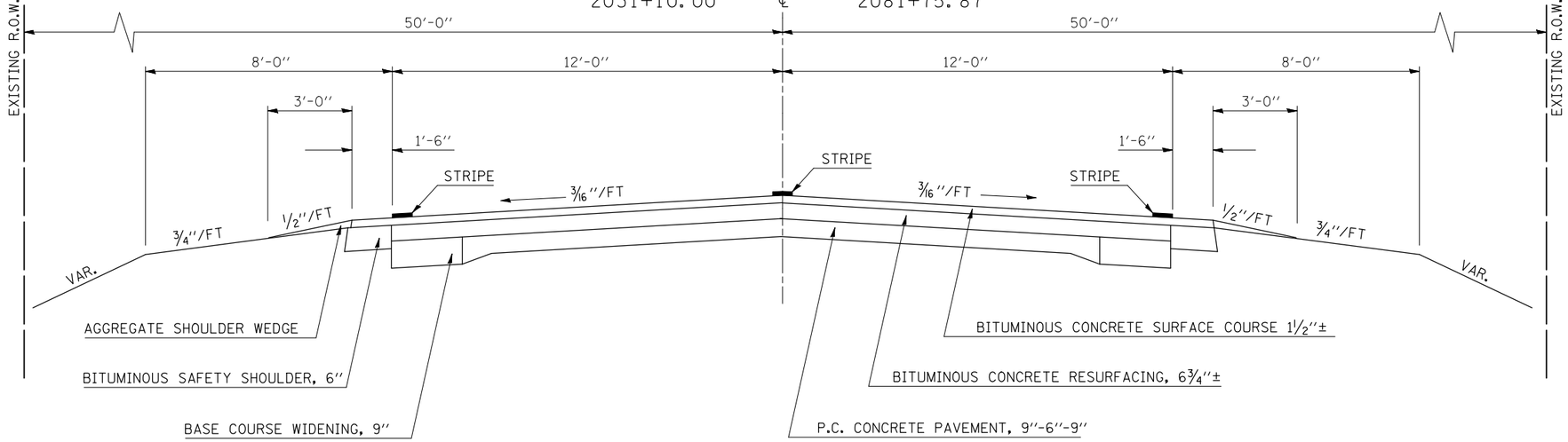

2 PROPOSED TYPICAL CROSS SECTION

STATION	TO	STATION
1 1687+00.00		1782+90.00 3
3 1788+50.00		1792+41.35 4
4 1828+50.35		1943+00.00 5
5 1947+59.50		2025+28.50 6
6 2031+10.00	℄	2081+75.87

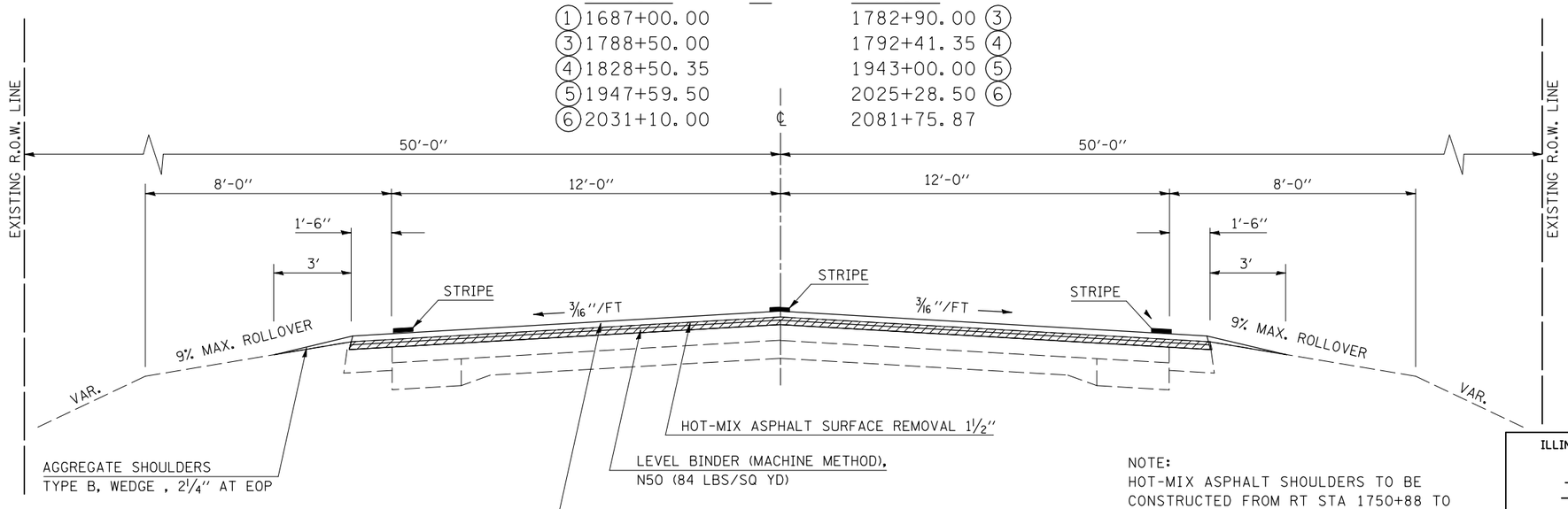

NOTE:
HOT-MIX ASPHALT SHOULDERS TO BE CONSTRUCTED FROM RT STA 1750+88 TO RT STA 1754+88.5 AND LT STA 1751+00 TO LT STA 1757+62. SEE PLAN SHEETS FOR DETAILS.

ILLINOIS DEPARTMENT OF TRANSPORTATION

EXISTING & PROPOSED
TYPICAL CROSS SECTIONS

F.A.P. ROUTE 323 (US 36)
SECTION (149,150)RS-3
EDGAR COUNTY

SCALE: N/A
DRAWN BY: CADD
DATE: 05/02/2006
CHECKED BY

PLOT DATE = 4/6/2009
FILE NAME = c:\pw-work\PWIDOT\SHEREFJN\dms87384\gpscsts.dgn
PLOT SCALE = 42.3529 ' / IN.
USER NAME = sherefjn