CONTRACT NO. 70113

F.A.P. RTE.	SECTION	COUNTY	TOTAL SHEETS	SHEET NO.
323	(149,150)RS-3	EDGAR	83	81

STA. 1833+79.00 TO STA. 1834+00.00

FED. ROAD DIST. NO. _ ILLINOIS FED. AID PROJECT

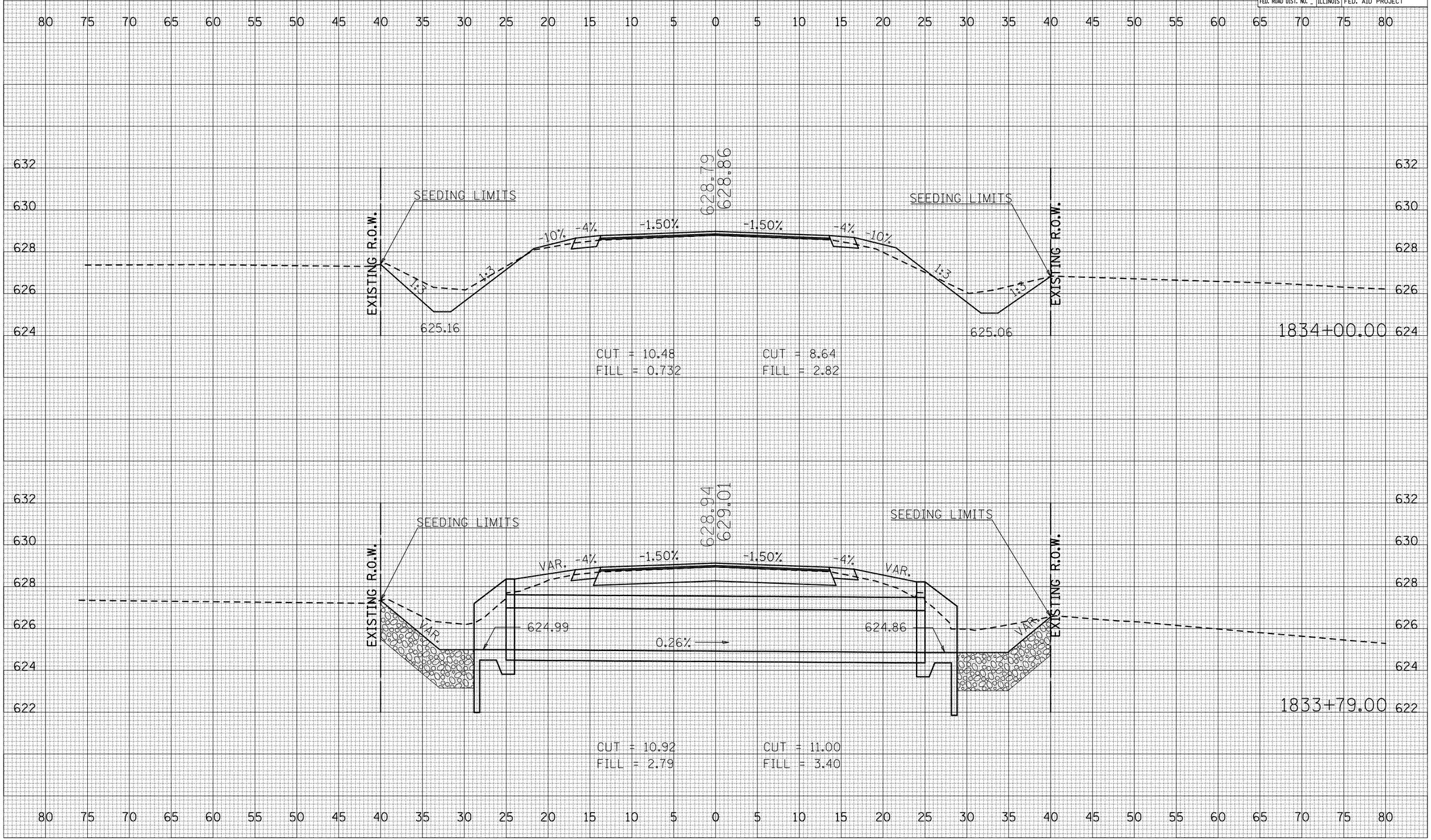

FINAL SURVEY
NOTE BOOK NO.
SURVEYED
PLOTTED
TEMPLATE
AREAS
AREAS CHECKED
BY
DATE

ORIGINAL SURVEY
NO.
SURVEYED
PLOTTED
TEMPLATE
AREAS
AREAS CHECKED
BY
DATE

PLOT DATE = 4/4/2009
FILE NAME = c:\pw_work\PWIDOT\SHERERJM\dms87\dms_vol_sheets.dgn
PLOT SCALE = 10.5882 ' / IN.
USER NAME = sherer.jm