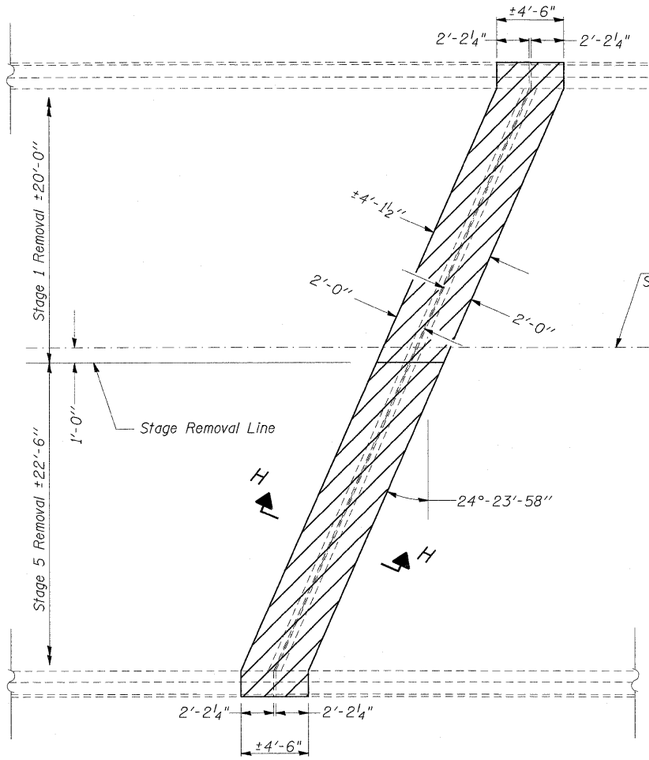

PIER 16 PLAN
SHOWING CONCRETE REMOVAL

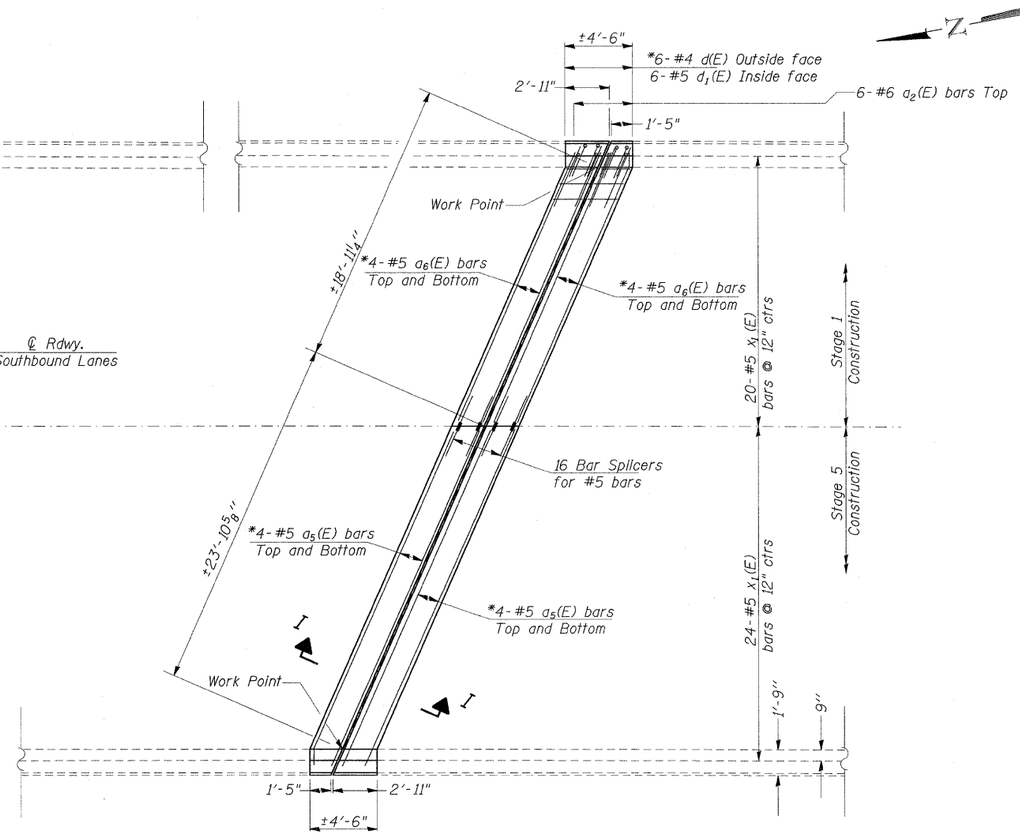

PIER 16 PLAN
SHOWING NEW CONCRETE

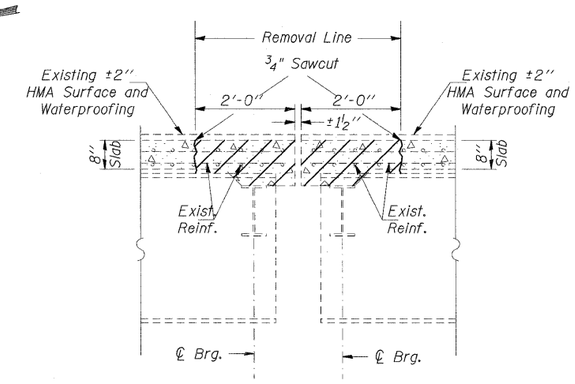

SECTION H-H
Dimensions measured ⊗
Right Angles

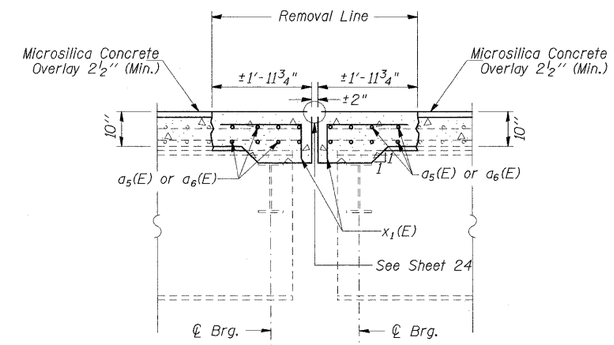

SECTION I-I
Dimensions measured ⊗
Right Angles

Concrete Removal

Notes:

* Bend Bars in Field to fit.

Dimensions are based on a Rolled Rail Strip Seal Joint. If the Contractor elects to use the Welded Rail Strip Seal Joint, deck dimensions may require adjustments to satisfy the details on Base Sheet EJ-SSJ.

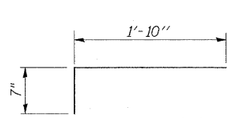

bar $x_1(E)$

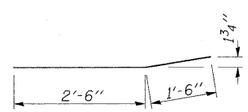

bar $a_2(E)$

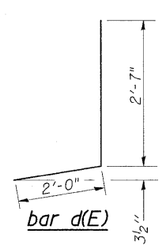

bar d(E)

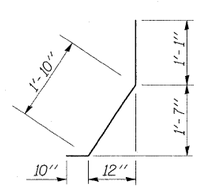

bar $d_1(E)$

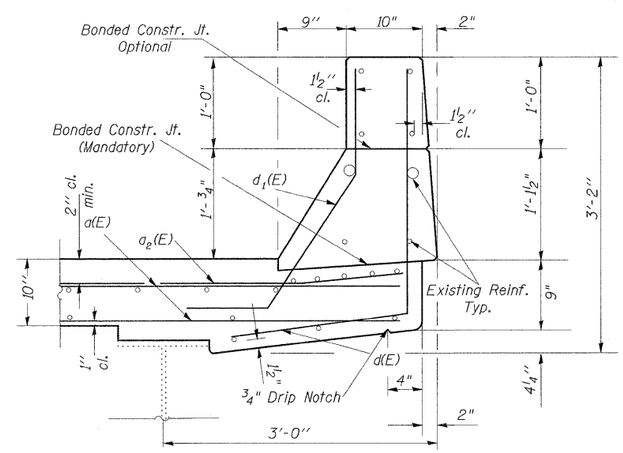

SECTION THRU PARAPET
Deck Section

BILL OF MATERIAL

Bar	No.	Size	Length	Shape
$a_2(E)$	12	#6	4'-0"	
$a_5(E)$	16	#5	24'-0"	
$a_6(E)$	16	#5	19'-0"	
d(E)	12	#4	4'-7"	
$d_1(E)$	12	#5	3'-9"	
$x_1(E)$	44	#5	2'-5"	
Concrete Superstructure			Cu. Yd.	8.4
Concrete Removal			Cu. Yd.	7.3
Reinforcement Bars, Epoxy Coated			Pound	1000

PIER 16
JOINT REPLACEMENT DETAILS
ALEXANDER COUNTY
SN 002-0024

FILE NAME = c:\pw_work\PWIDOT\HALSTEADTW\d0113592\002-0023.dgn	USER NAME = halsteadtw	DESIGNED -	REVISED -
		DRAWN -	REVISED -
	PLOT SCALE = 5.0000 ' / IN.	CHECKED -	REVISED -
	PLOT DATE = 4/3/2009	DATE -	REVISED -

STATE OF ILLINOIS
DEPARTMENT OF TRANSPORTATION

JOINT REPLACEMENT DETAILS
SN 002-0024

SCALE: | SHEET NO. OF SHEETS | STA. TO STA.

F.A.I. RTE.	SECTION	COUNTY	TOTAL SHEETS	SHEET NO.
57	D9 BSMART FY09-2	ALEXANDER	45	20

CONTRACT NO. 78111
ILLINOIS FED. AID PROJECT