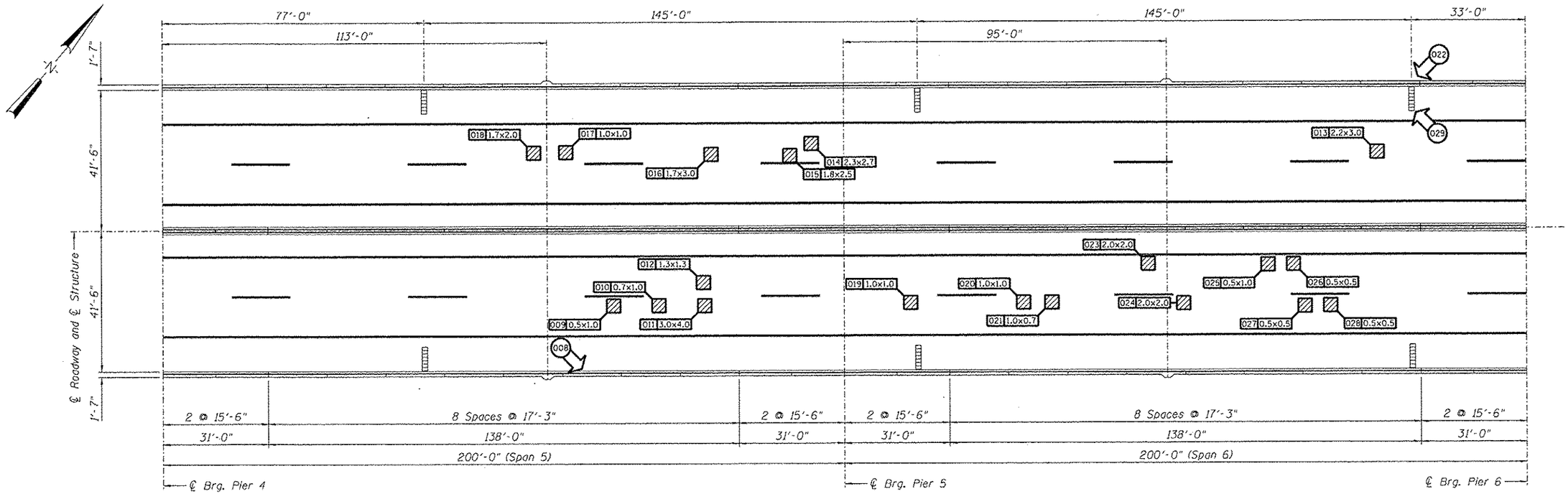

MISSOURI APPROACH - SPANS 5 and 6

REPAIRS LIST - SPANS 5 and 6

	I.D.	Description	Pay Item	Units	Quantity
*	008	Missing Fasteners Bridge Rail Splice	-	-	-
	009	Concrete Spall	Deck Slab Repair (Partial)	SQ. YD.	0.06
	010	Concrete Spall	Deck Slab Repair (Partial)	SQ. YD.	0.08
	011	Concrete Spall	Deck Slab Repair (Partial)	SQ. YD.	1.33
	012	Concrete Spall	Deck Slab Repair (Partial)	SQ. YD.	0.19
	013	Concrete Spall	Deck Slab Repair (Partial)	SQ. YD.	0.73
	014	Concrete Spall	Deck Slab Repair (Partial)	SQ. YD.	0.69
	015	Concrete Spall	Deck Slab Repair (Partial)	SQ. YD.	0.50
	016	Concrete Spall	Deck Slab Repair (Partial)	SQ. YD.	0.57
	017	Concrete Spall	Deck Slab Repair (Partial)	SQ. YD.	0.11
	018	Concrete Spall	Deck Slab Repair (Partial)	SQ. YD.	0.38
	019	Concrete Spall	Deck Slab Repair (Partial)	SQ. YD.	0.11
	020	Concrete Spall	Deck Slab Repair (Partial)	SQ. YD.	0.11
	021	Concrete Spall	Deck Slab Repair (Partial)	SQ. YD.	0.08
**	022	Missing Bracket Fastener	-	-	-
	023	Concrete Spall	Deck Slab Repair (Partial)	SQ. YD.	0.44
	024	Concrete Spall	Deck Slab Repair (Partial)	SQ. YD.	0.44
	025	Concrete Spall	Deck Slab Repair (Partial)	SQ. YD.	0.06
	026	Concrete Spall	Deck Slab Repair (Partial)	SQ. YD.	0.03
	027	Concrete Spall	Deck Slab Repair (Partial)	SQ. YD.	0.03
	028	Concrete Spall	Deck Slab Repair (Partial)	SQ. YD.	0.03
	029	Clogged Scupper	Cleaning Bridge Scuppers and Downspouts	Each	1

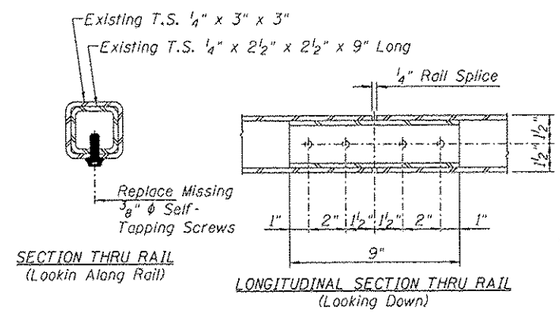

BRIDGE RAIL SPLICE FASTENER REPAIR

Note:
When neccessary reposition interior splice sleeve by realigning the sleeve and rail holes for either side prior to installing new fasteners. Install 2 fasteners on one side only. Fasteners shall be self tapping galvanized screws of sufficient diameter to retap any damaged screw holes and provide a tight connection.

* Cost for repairing existing bridge rail splice shall be included in the Cost of Deck Slab Repair (Partial).

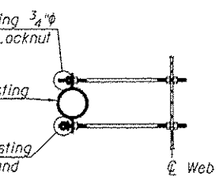

EXISTING DRAIN BRACKET

Note:
** Cost of repairing existing drain bracket shall be included in the Cost of Cleaning Bridge Scuppers and Downspouts.

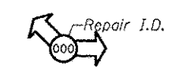

OTHER ITEMS

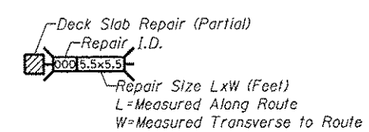

DECK SLAB REPAIR (PARTIAL)

DESIGNED -	EXAMINED	DATE -	
CHECKED -	ENGINEER OF STRUCTURAL SERVICES		
DRAWN Rod	PASSED		
CHECKED MNM	ENGINEER OF BRIDGES AND STRUCTURES		

STATE OF ILLINOIS
DEPARTMENT OF TRANSPORTATION

REPAIRS TO – DECK SLAB and PARAPETS – SPANS 5 and 6
STRUCTURE NO. 060-0255

SHEET NO. 05 OF 48 SHEETS

F.A.P. RTE.	SECTION	COUNTY	TOTAL SHEETS	SHEET NO.
304	100B-1DS-1	MADISON	58	15
		CONTRACT NO. 76E73		
		ILLINOIS FED. AID PROJECT		

© Copyright Hanson Professional Services Inc. 2012
hsfl1m0028 10/17/2012 12:08:48 PM
I:\Projects\MOOT\WO4\CAD\SHEETS\0600255-76E73-005-Deck_Repairs_Spans_5-6.dgn