F.A.I. RTE.	SECTION	COUNTY	TOTAL SHEETS	SHEET NO.
94	*	COOK	916	370
STA. 190+65 (NB I-57) 190+48 (NB FORD)		TO STA. 2316+00 (NB RYAN)		
FED. ROAD DIST. NO.	ILLINOIS	FED. AID PROJECT		

* (1516.1, 1717, & 1818) R-4

62304

1

NOTES:

(1) GEOTECHNICAL FABRIC FOR GROUND STABILIZATION SHALL BE PLACED SUCH THAT IT EXTENDS TO THE EDGE OF THE TRENCH AND OVERLAPS THE FILTER FABRIC BY A MINIMUM OF 6". AT NO TIME SHALL THE GEOTECHNICAL FABRIC FOR GROUND STABILIZATION BE OVER OR COVER THE UNDERDRAIN TRENCH.

(2) NO CONSTRUCTION TRAFFIC SHALL BE ALLOWED ON THE TRENCH UNTIL A MINIMUM OF 12" OF COMPACTED SUB-BASE IS PROVIDED.

(3) THE PIPE UNDERDRAIN TRENCH SHALL BE LINED WITH FILTER FABRIC ON THE BOTTOM AND SIDES OF THE TRENCH. THE TOP OF THE TRENCH MUST NOT BE COVERED WITH ANY FABRIC.

(4) FILTER FABRIC, FABRIC ENVELOPE, AND CA-16 AGGREGATE ARE INCLUDED IN THE UNIT COST OF PIPE UNDERDRAIN, 6".

(5) CONTRACTOR SHALL FLUSH PIPE UNDERDRAIN WITH WATER TO INSURE UNDERDRAIN IS FUNCTIONING PROPERLY PRIOR TO THE PLACEMENT OF STABILIZED SUB-BASE. PRIOR TO COMMENCING THIS WORK, THE CONTRACTOR SHALL PROVIDE THE ENGINEER WITH HIS APPROACH AND METHODS FOR COMPLETING THIS WORK, FOR THE ENGINEER'S REVIEW AND APPROVAL. THE COST OF FLUSHING THE PIPE IS INCLUDED IN THE UNIT COST OF PIPE UNDERDRAIN, 6".

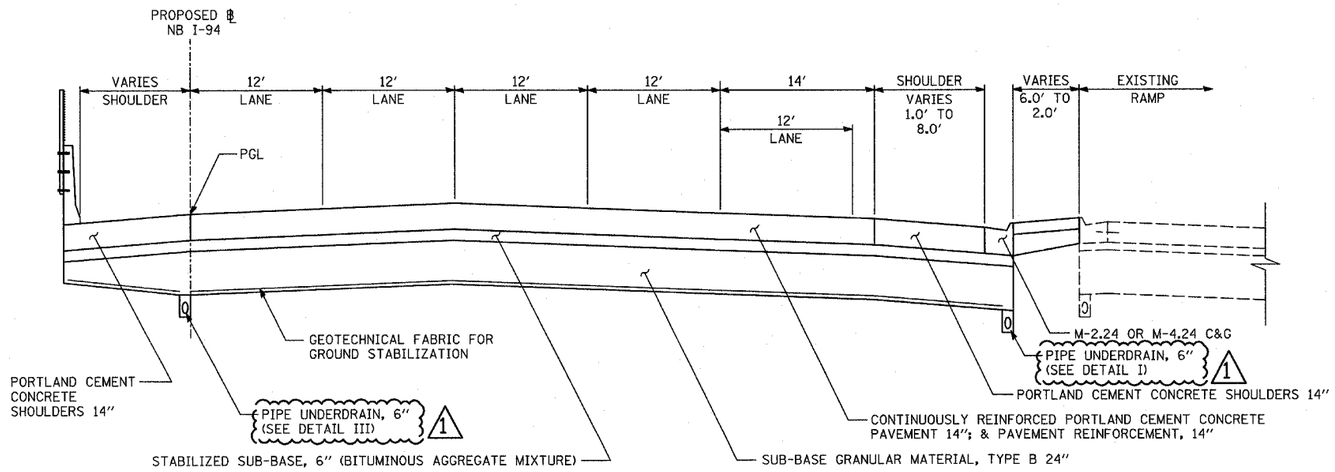

PROPOSED NB I-94 MAINLINE PAVEMENT

LOCATIONS VARY (95TH ST, 87TH ST, 83RD ST)

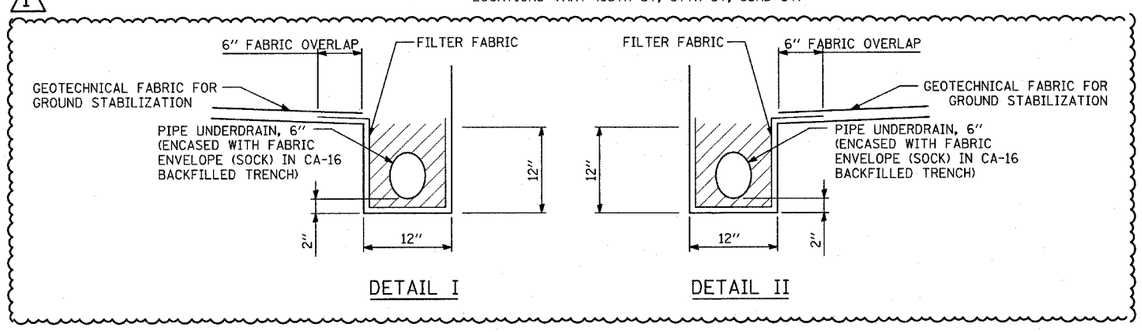

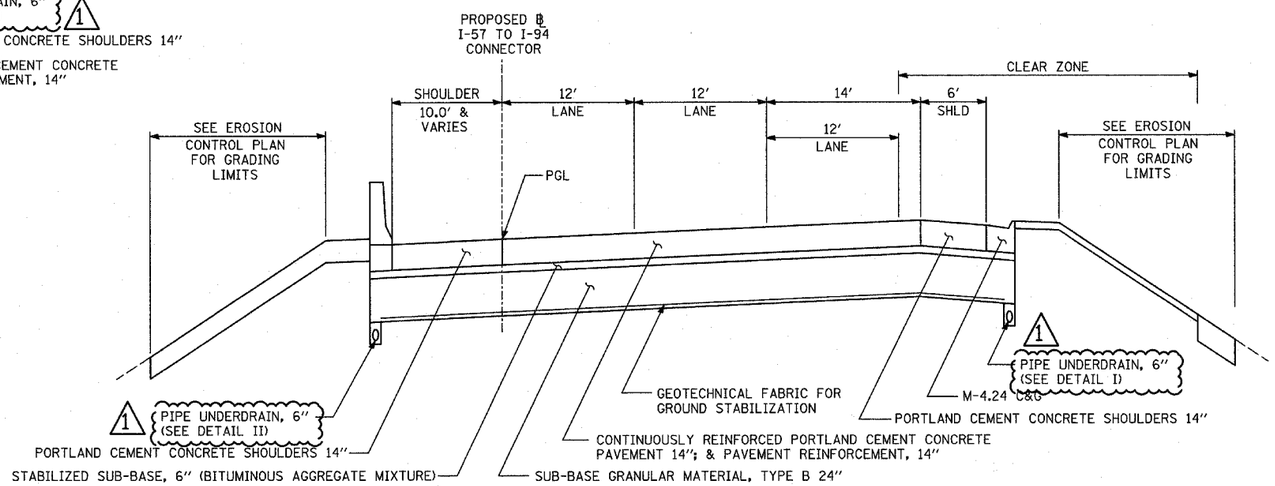

PROPOSED NB I-57 MAINLINE PAVEMENT

BETWEEN WENTWORTH AND NB I-57 STA. 234+50.00

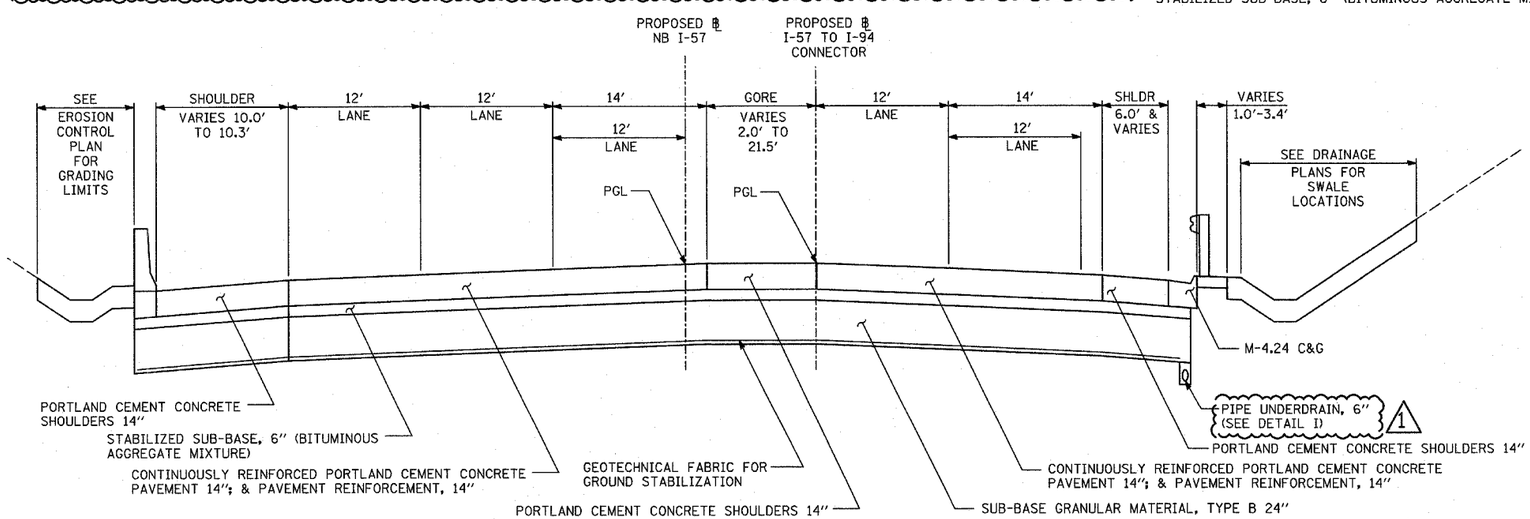

PROPOSED NB I-57 / EB I-57 TO I-94 CONNECTOR PAVEMENT

LOCATIONS VARY BETWEEN C. & W.I. R.R. AND WENTWORTH AVENUE

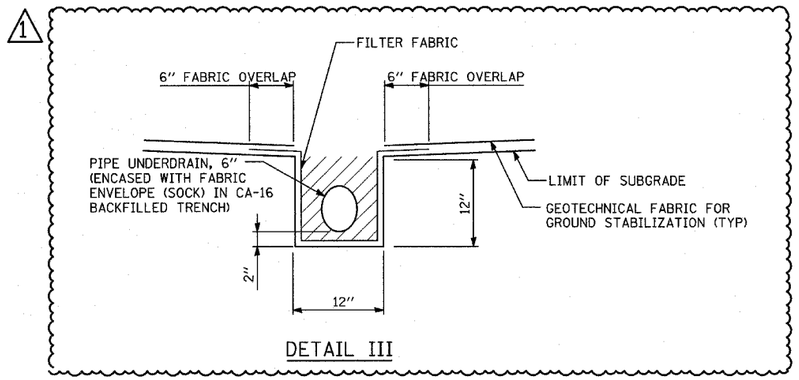

TYLIN INTERNATIONAL

REVISIONS NAME	DATE
ADDENDUM 1	05/08/06

ILLINOIS DEPARTMENT OF TRANSPORTATION

F.A.I. 94 (DAN RYAN EXPRESSWAY)

PIPE UNDERDRAINS ALONG I-57 AND I-94 DETAILS SHEET 2 OF 2

SCALE: NONE | DRAWN BY: BK

DATE: MARCH 7, 2006 | CHECKED BY: DA