F.A.I. RTE.	SECTION	COUNTY	TOTAL SHEETS	SHEET NO.
57	*	COOK	916	577
STA.		TO STA.		
FED. ROAD DIST. NO. 1	ILLINOIS	FED. AID PROJECT		

CONTRACT NO. 62304
*(1516.1, 1717, & 1818) R-4

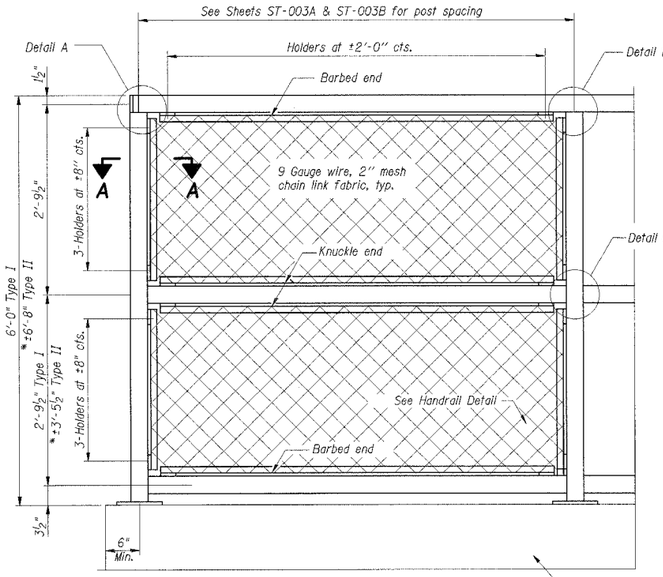

* Field verify. Adjust dimension such that Type II top of rail elevation matches adjacent Type I top of rail elevation.

ELEVATION
(Inside Face)

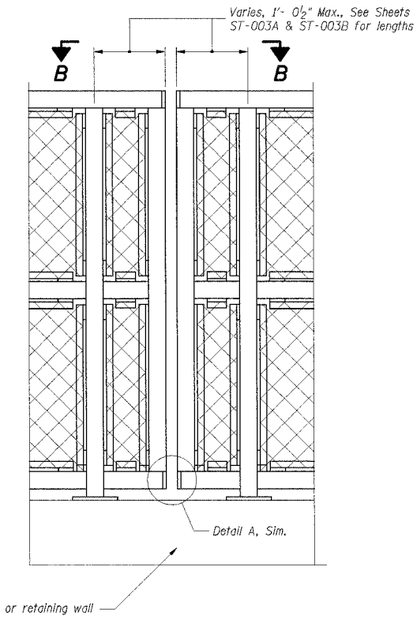

ELEVATION CANTILEVER EXTENSION

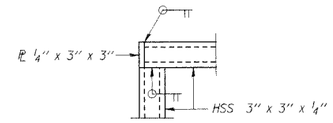

DETAIL A

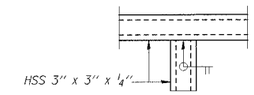

DETAIL B

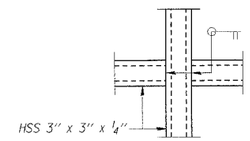

DETAIL C

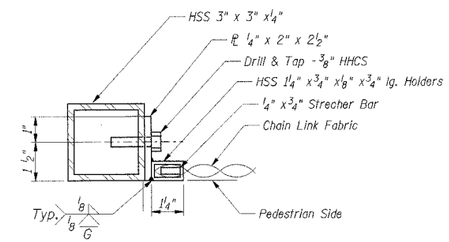

SECTION A-A

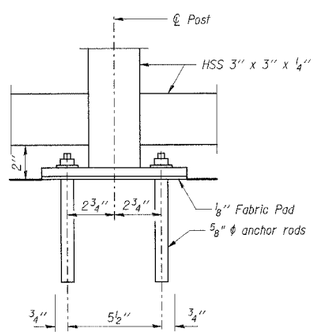

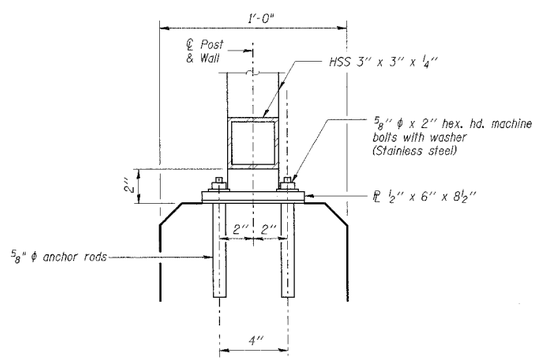

ANCHOR BOLT DETAILS

The Contractor shall drill and epoxy grout ⅝" ϕ anchor rods. Embedment shall be according to the manufacturer's specifications.

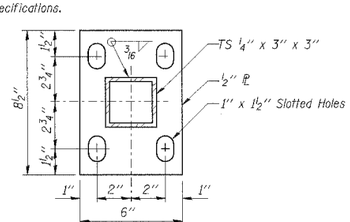

BASE PL

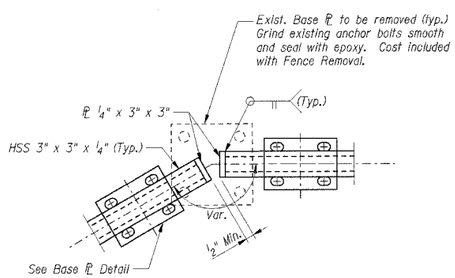

SECTION B-B

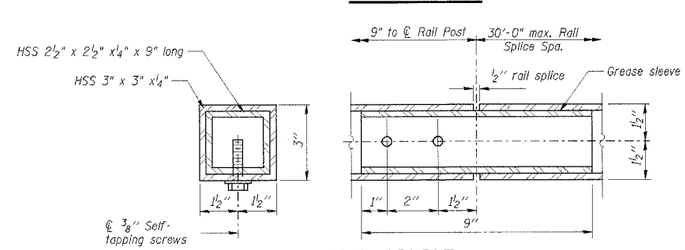

RAIL SPLICE

NOTES:

1. Railing shall be according to Section 509 of the Standard Specifications, except as noted, and will be paid for at the Contract Unit Price per foot for Pedestrian Railing.
2. The 9 gauge fabric ties shall be according to Article 1006.27(d) of the Standard Specifications.
3. Installation of the chain link fabric shall be according to Section 664 of the Standard Specifications.
4. Hollow structural sections shall conform to the requirements of ASTM designation A500, Grade B, structural steel tubing.
5. All other steel shapes and plates shall conform to the requirements of AASHTO M270 Grade 36.
6. The chain link fabric shall be placed along Pedestrian Side as shown on Section A-A.
7. Stretcher bars shall be used at all four sides of each panel.
8. If the option of drilling and epoxy grouting the anchor rods is chosen, The Contractor shall use the capsule or the adhesive cartridge type anchor rods that have been previously tested and given a prior approval by the Department. The Contractor shall install these anchor rods in pre-drilled holes according to the manufacturer's recommendations and procedures. The capsule or the adhesive cartridge shall be sealed with pre-measured amounts of the adhesive chemical.
9. All posts, railing, splices, anchor devices, and bent plates shall be galvanized after shop fabrication according to AASHTO M111 and ASTM A385. All bolts, nuts, washers, and anchor rods shall be galvanized according to AASHTO M232 except stainless steel bolts as noted.
10. Vent holes for galvanizing shall be placed in the posts and rails at locations that will not allow the accumulation of moisture in the members.
11. The chain link fabric shall conform to the requirements of Article 1006.27(a)(1)a of the Standard Specifications.

1

BILL OF MATERIAL

Item	Unit	Total
Pedestrian Railing	Foot	690.2

R-28 Special (10'-0" Maximum Post Spacing)

SHT. ST-005

REVISIONS	
NAME	DATE
ADDENDUM 1	05/08/06

ILLINOIS DEPARTMENT OF TRANSPORTATION
F.A.I. ROUTE 57 (INTERSTATE 57) OVER
F.A.I. ROUTE I-94 SB & CTA TRACKS-BRIDGE REPAIRS
SN 016-0073
COOK COUNTY
SECTION (1516.1, 1717, & 1818) R-4
PEDESTRIAN RAILING

DATE: 05/08/06
DRAWN BY: RDS
CHECKED BY: VP

TENG
TENG & ASSOCIATES, INC.
ENGINEERS/ARCHITECTS/PLANNERS
205 N. MICHIGAN AVE., CHICAGO, IL 60601
TELEPHONE 312.616.0000

1 Revised Sheet 05/08/2006, MDB

LEEAC
...\BRBORDER.DGN, ...\STDTOYNE.DGN
5/07/2006, 11:19:12 AM I:\DOCUMENT\19930860\STRUCTURA\HRDOOR.DGN