F.A.I. RTE.	SECTION	COUNTY	TOTAL SHEETS	SHEET NO.
57	*	COOK	916	595
STA.		TO STA.		
FED. ROAD DIST. NO.	ILLINOIS	FED. AID PROJECT		

CONTRACT NO. 62304
*(1516.1, 1717, & 1818) R-4

INTERIOR GIRDER MOMENT TABLE

		0.5 Span
Is	(in^4)	21,196
Ic (n)	(in^4)	55,883
Ic (3n)	(in^4)	40,325
Ss	(in^3)	1,079
Sc (n)	(in^3)	1,441
Sc (3n)	(in^3)	1,333
Z	(in^3)	
DL	(k/ft)	1.007
M DL	(k-ft)	1493.0
sDL	(k/ft)	0.642
M sDL	(k-ft)	951.9
M LL	(k-ft)	1259.8
M (Imp)	(k-ft)	270.9
5/3 [M LL + M (Imp)]	(k-ft)	2551.2
Ma	(k-ft)	6494.9
Mu	(k-ft)	7161
fs DL (non-comp)	(ksi)	16.65
fs DL (comp)	(ksi)	8.57
fs 5/3 [M LL + M (Imp)]	(ksi)	21.25
fs (Overload)	(ksi)	46.47
fs (Total)	(ksi)	
VR	(k)	66

Is and Ss are the moment of inertia and section modulus of the steel section used in computing fs (Total & Overload).

Ic(n) and Sc(n) are the moment of inertia and section modulus of the composite section used in computing stresses due to Live Load.

Ic(3n) and Sc(3n) are the moment of inertia and section modulus of the composite section used in computing stresses due to superimposed dead loads. (see AASHTO 10.38)

VR is the maximum Live Load + Impact shear range in span.

Z is the plastic section modulus used to determine the fully plastic moments in the non-composite areas.

Ma (Applied Moment)=1.3[M ℙ + Ms ℙ + 5/3(M ℄ + M(Imp))].

The Plastic Moment capacity (Mu) is computed according to AASHTO 10.48.1 and 10.50.1.1.

fs (Overload) is the sum of the stresses due to Mℙ + Msℙ + 5/3(M ℄ + M(Imp)).

fs (Total) (Non-compact section) is the sum of the stresses due to 1.3[Mℙ + Msℙ + 5/3(M ℄ + M(Imp))].

INTERIOR GIRDER REACTION TABLE

		N. or S. Abut.
R DL	(k)	89.8
R LL	(k)	54.0
Imp.	(k)	11.6
R (Total)	(k)	155.4

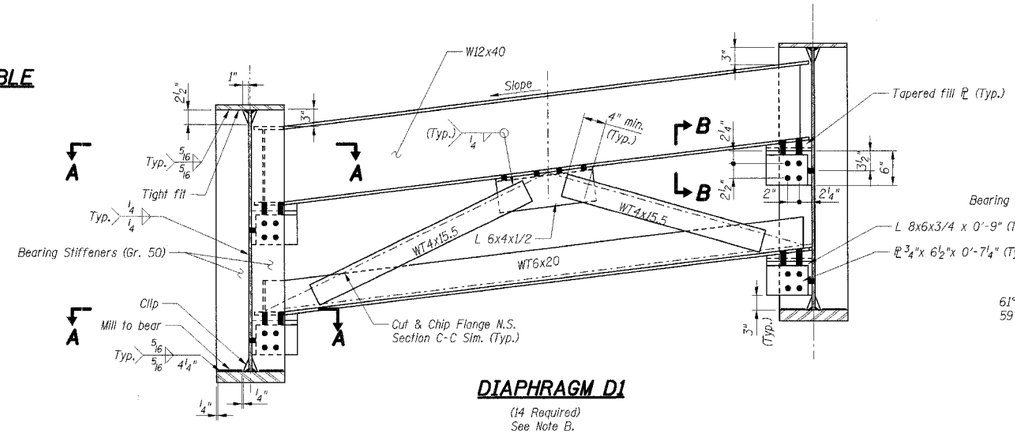

DIAPHRAGM D1

(14 Required)
See Note B.

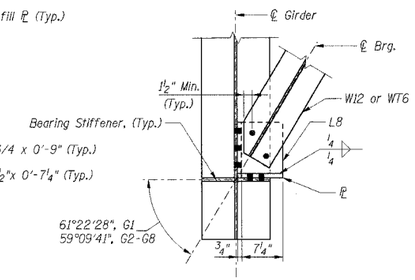

SECTION A-A

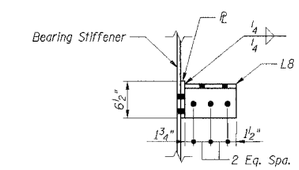

SECTION B-B

(Tapered fill ℙ & W12 not shown)

At girder 3 only: provide auxiliary connection ℙs opposite the connection ℙs for diaphragms between girders 2 and 3. ℙ and attachment to girder similar to typical connection ℙ. Provide one 5/16" open hole at mid-height. See Sht. S-003.

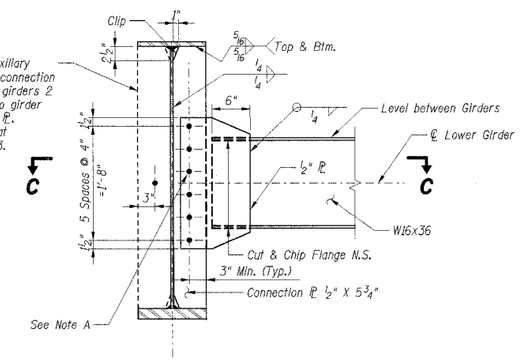

DIAPHRAGM D2 & D3

(Diaphragm D2 - 24 Required, Diaphragm D3 - 5 Required)

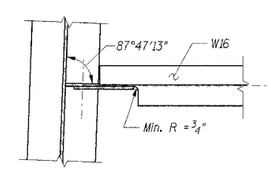

SECTION C-C

(Girder 1)

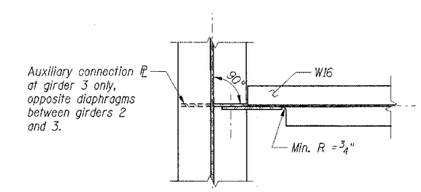

SECTION C-C

(Girders 2 thru 8)

Note A: Diaphragms D2 crossing the stage construction line between girders 3 and 4 shall be installed with one bolt snug tight at each end, to permit rotation during Stage II and closure pour deck casting. Diaphragm bolts at all other locations shall be fully tightened prior to deck casting. Install and fully tighten remaining bolts after placement of the Stage II closure pour.

Note B, To SHOP:
Detail diaphragm D1 members and connections for girders plumb in the final condition, which includes deflection due to weight of steel and deck concrete, with girder webs and bearing stiffeners vertical.

Notes:

1. All steel shall be AASHTO M 270 Grade 50 except diaphragms, diaphragm connection plates, and fill plates which may be AASHTO M 270 Grade 36.
2. Two hardened washers shall be required over all oversize holes.
3. For Framing Plan see Sht. S-017.
4. Structural Steel shall be fabricated and erected under separate contracts and shall be paid for in accordance with the Special Provisions Furnishing Structural Steel and Elastomeric Bearings and Erecting Structural Steel and Elastomeric Bearings and Sections 503 and 505 of the Standard Specifications.

SHT. S-018

REVISIONS	
NAME	DATE

ILLINOIS DEPARTMENT OF TRANSPORTATION
F.A.I. ROUTE 57 (INTERSTATE 57)
I-57 NB OVER WB CONNECTOR
SN 016-0072 OLD, SN 016-2852 NEW
STA. 238+73.54
COOK COUNTY, SECTION (1516.1, 1717, & 1818) R-4

STRUCTURAL STEEL DETAILS

DATE: 03/07/06
DRAWN BY: VV
CHECKED BY: RDS

TENG
TENG & ASSOCIATES, INC.
ENGINEERS/ARCHITECTS/PLANNERS
205 N. MICHIGAN AVE., CHICAGO, IL 60601
TELEPHONE: 312.616.0000

\\FRPOOWOT.DGN \\SBLOOWBG.DGN \\BRBPRDER.DGN \\STLOOW.DGN
3-09-2006 6:59:58 \\FS-000\PROJ_CIVIL\DOCUMENT\93080\STRUCT\DGN\STLOOWBLDGN
USETC