F.A.I. RTE.	SECTION	COUNTY	TOTAL SHEETS	SHEET NO.
94	•	COOK	764	334
STA. 88+60 (SB I-57) STA. 1126+91 (SB FORD)		TO STA. 1313+00 (SB RYAN)		
FED. ROAD DIST. NO.	ILLINOIS	FED. AID PROJECT		

• (1516.1, 1717, & 1818) R-5

62593

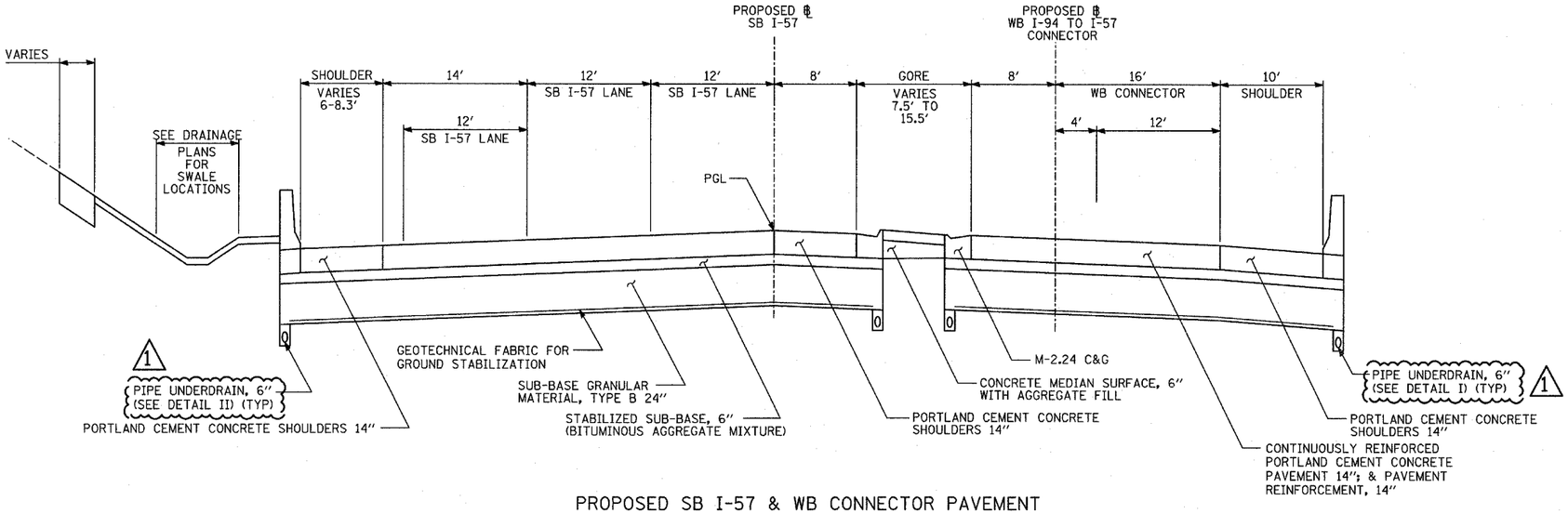

PROPOSED SB I-57 & WB CONNECTOR PAVEMENT

EAST OF WENTWORTH AVENUE

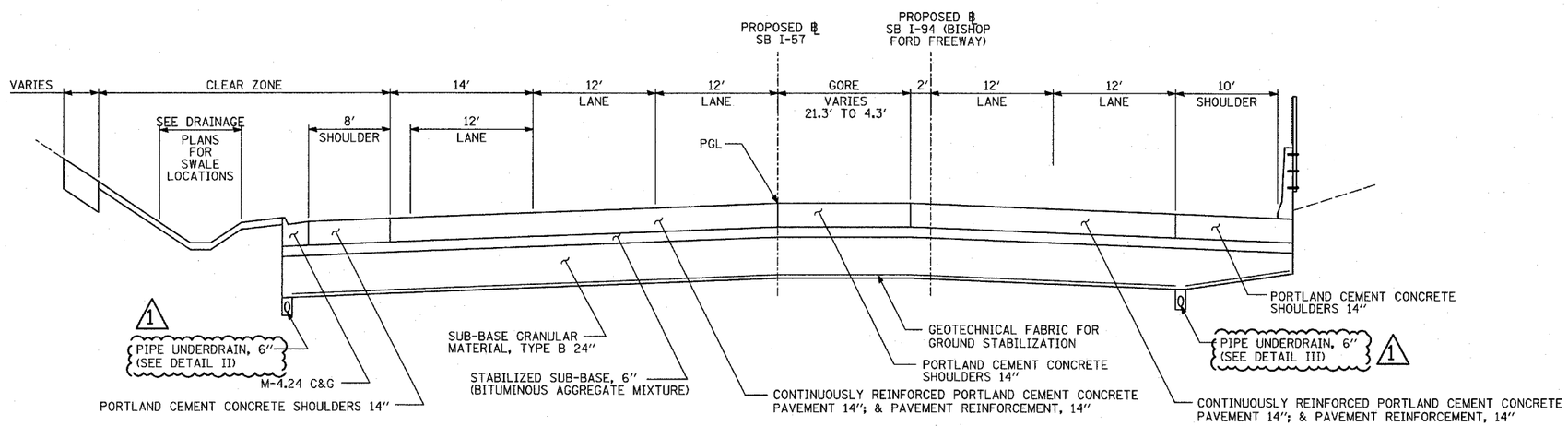

PROPOSED SB I-57 & SB I-94 MAINLINE PAVEMENT

NORTH OF SB I-94/I-57 SPLIT

1

NOTES:

(1) GEOTECHNICAL FABRIC FOR GROUND STABILIZATION SHALL BE PLACED SUCH THAT IT EXTENDS TO THE EDGE OF THE TRENCH AND OVERLAPS THE FILTER FABRIC BY A MINIMUM OF 6". AT NO TIME SHALL THE GEOTECHNICAL FABRIC FOR GROUND STABILIZATION BE OVER OR COVER THE UNDERDRAIN TRENCH.

(2) NO CONSTRUCTION TRAFFIC SHALL BE ALLOWED ON THE TRENCH UNTIL A MINIMUM OF 12" OF COMPACTED SUB-BASE IS PROVIDED.

(3) THE PIPE UNDERDRAIN TRENCH SHALL BE LINED WITH FILTER FABRIC ON THE BOTTOM AND SIDES OF THE TRENCH. THE TOP OF THE TRENCH MUST NOT BE COVERED WITH ANY FABRIC.

(4) FILTER FABRIC, FABRIC ENVELOPE, AND CA-16 AGGREGATE ARE INCLUDED IN THE UNIT COST OF PIPE UNDERDRAIN, 6".

(5) CONTRACTOR SHALL FLUSH PIPE UNDERDRAIN WITH WATER TO INSURE UNDERDRAIN IS FUNCTIONING PROPERLY PRIOR TO THE PLACEMENT OF STABILIZED SUB-BASE. PRIOR TO COMMENCING THIS WORK, THE CONTRACTOR SHALL PROVIDE THE ENGINEER WITH HIS APPROACH AND METHODS FOR COMPLETING THIS WORK, FOR THE ENGINEER'S REVIEW AND APPROVAL. THE COST OF FLUSHING THE PIPE IS INCLUDED IN THE UNIT COST OF PIPE UNDERDRAIN, 6".

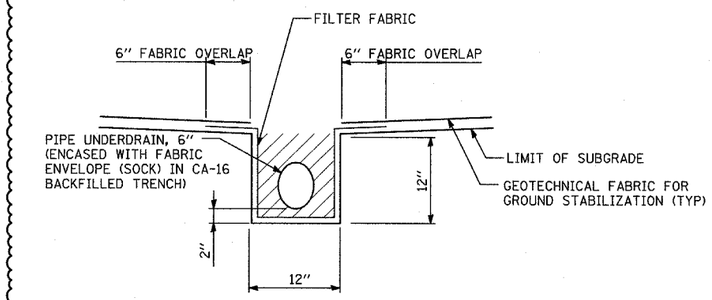

DETAIL III

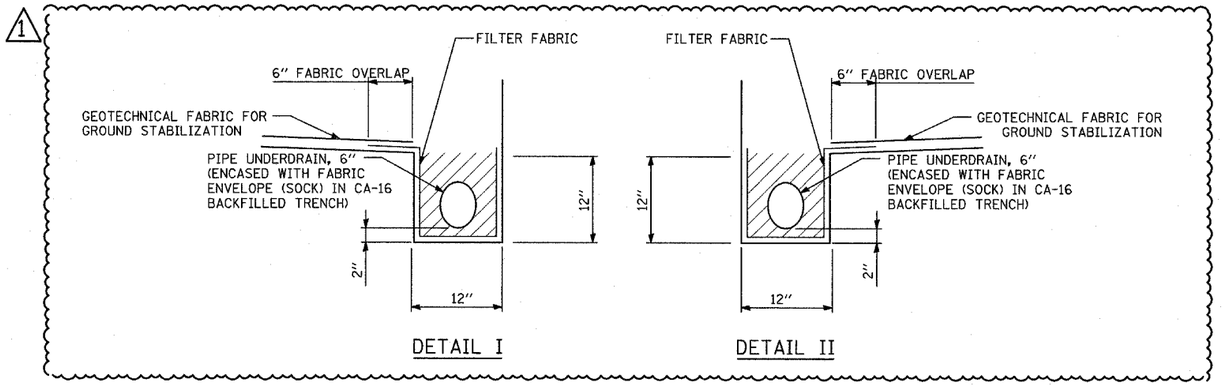

DETAIL I DETAIL II

TYLIN INTERNATIONAL

REVISIONS	
NAME	DATE
ADDENDUM 1	05/08/06

ILLINOIS DEPARTMENT OF TRANSPORTATION

F.A.I. 94 (DAN RYAN EXPRESSWAY)

PIPE UNDERDRAINS ALONG I-57 AND I-94 DETAILS SHEET 1 OF 2

SCALE: NONE DRAWN BY: BK

DATE: MARCH 1, 2006 CHECKED BY: DA

5/5/2006 12:02:28 PM