STATE OF ILLINOIS
DEPARTMENT OF TRANSPORTATION

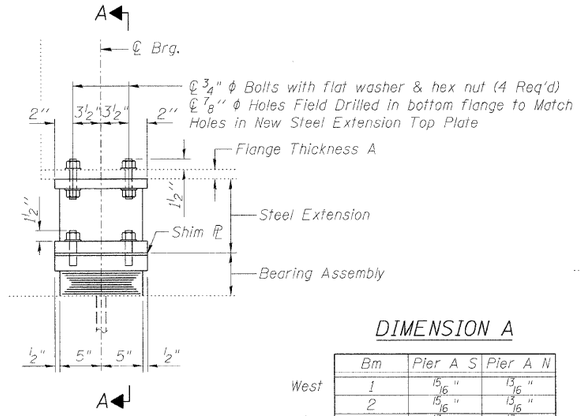

ELEVATION AT PIER

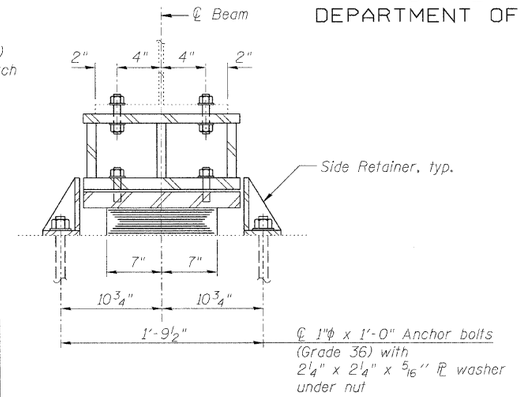

SECTION A-A

DIMENSION A

	Bm	Pier A S	Pier A N
West	1	15/16"	13/16"
	2	15/16"	13/16"
	3	13/16"	13/16"
	4	13/16"	13/16"
	5	13/16"	13/16"
	6	13/16"	13/16"
	7	13/16"	13/16"
East	8	15/16"	13/16"

TYPE I ELASTOMERIC EXP. BRG.
(Pier A Bearings)

Notes:

Hatch area indicates Bearing removal. See Special Provision for Jack and Remove Existing Bearings.

Anchor bolts shall be ASTM F1554 all-thread (or an Engineer-approved alternate material) of the grade(s) and diameter(s) specified. ASTM A307 Grade C anchor bolts may be used in lieu of ASTM F1554 Grade 36 (Fy=36ksi). The corresponding specified grade of AASHTO M314 anchor bolts may be used in lieu of ASTM F1554.

Drilled and set anchor bolts shall be installed according to Article 521.06 of the Standard Specifications.

Side retainers and other steel members required for the bearing assembly shall be included in the cost of Elastomeric Bearing Assembly, Type I.

Two 1/8 in. adjusting shims shall be provided for each bearing in addition to all other plates or shims and placed as shown on bearing details.

Steel Extensions shall be included in the cost of Furnishing and Erecting Structural Steel.

Fasteners shall be AASHTO M164 Type 1, mechanically galvanized bolts.

The Contractor is to verify the existing dimensions prior to fabricating the steel extensions. It is intended to keep the existing beams at their current elevation.

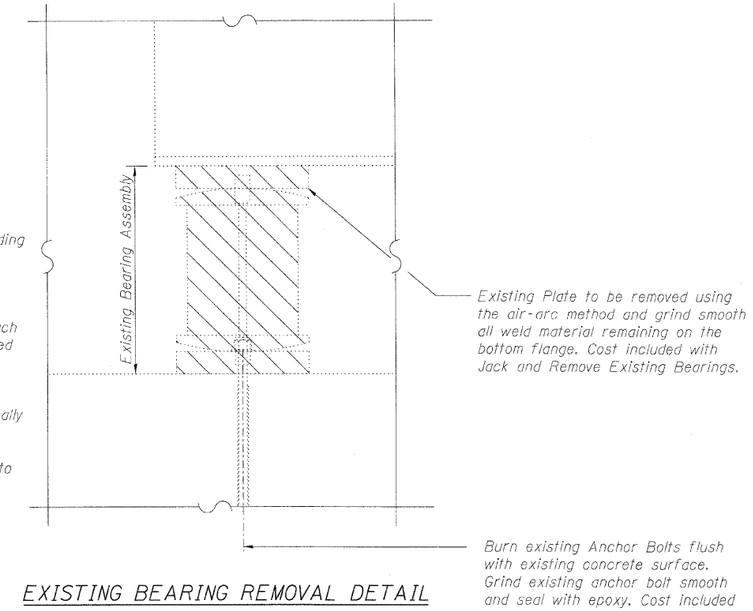

EXISTING BEARING REMOVAL DETAIL

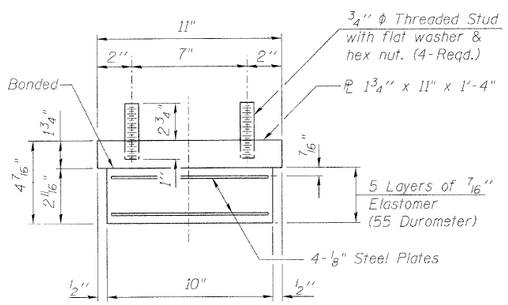

BEARING ASSEMBLY

Note:
Shim plates shall not be placed under Bearing Assembly.

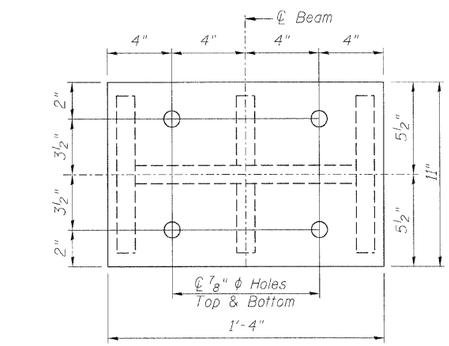

PLAN STEEL EXTENSION

SHIM PLATES

Pier A S		Pier A N	
Bm 1	⅛"	Bm 1	¼"
Bm 3	⅛"	Bm 2	¼"
Bm 7	⅛"	Bm 4	⅛"

BEAM REACTION TABLE

	Pier A S	Pier A N
Dead Load (K)	35.7	30.7
Live Load (K)	62.4	61.0
Impact (K)	15.9	13.1
Total (K)	114.0	104.8
Min. Jack Capacity (Tons)	57	53

BILL OF MATERIAL

Item	Unit	Total
Elastomeric Bearing Assembly Type I	Each	16
Anchor Bolts, 1"	Each	32
Jack and Remove Existing Bearings	Each	16
Furnishing and Erecting Structural Steel	Pound	3100

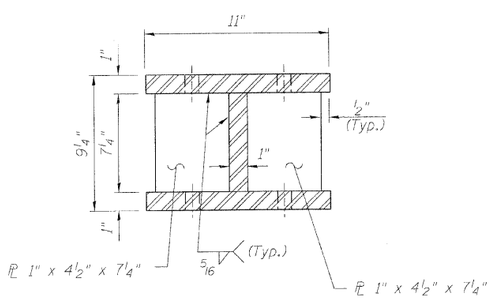

SECTION B-B

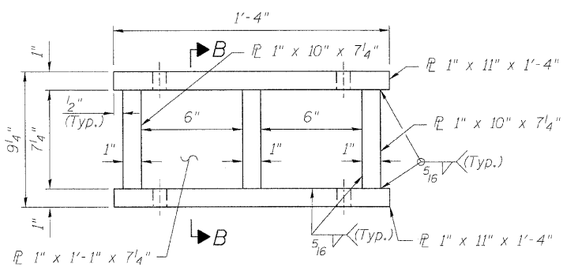

ELEVATION STEEL EXTENSION

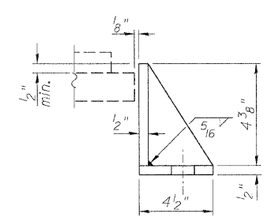

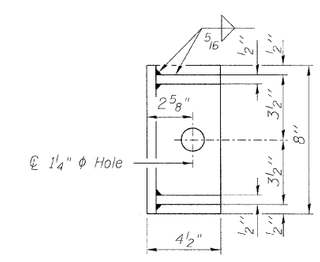

SIDE RETAINER

Equivalent rolled angle with stiffeners will be allowed in lieu of welded plates.

BEARING DETAILS
STRUCTURE NO. 016-0991

LIN ENGINEERING, LTD.
Consulting Engineers
Chatham, Illinois

Designed By: TBP | Checked By: MTH | Drawn By: TBP
Date: March, 2010 | File: 016-0991.dgn

SHEET NO. 9
14 SHEETS

F.A.P. RTE.	SECTION	COUNTY	TOTAL SHEETS	SHEET NO.
348	(0708.1&2323.5)B	COOK	47	37
		CONTRACT NO. 60D69		
	ILLINOIS	FED. AID PROJECT		