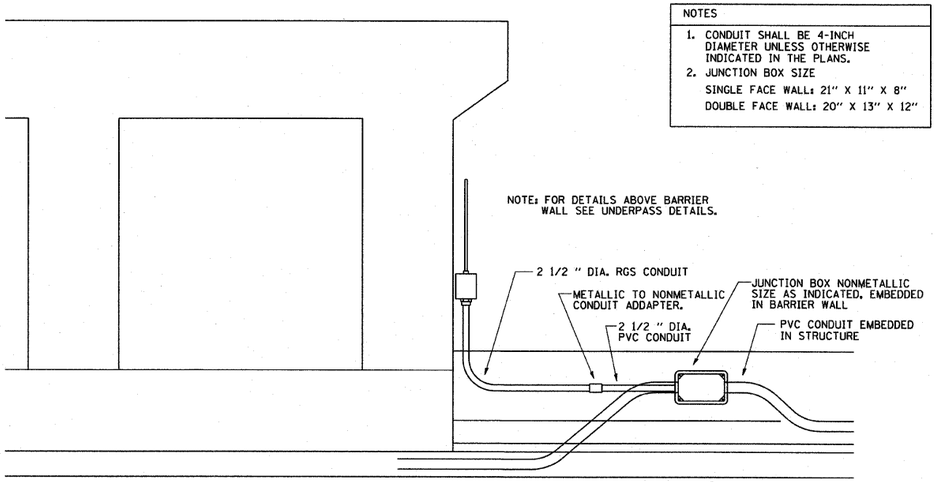

NOTES

1. CONDUIT SHALL BE 4-INCH DIAMETER UNLESS OTHERWISE INDICATED IN THE PLANS.
2. JUNCTION BOX SIZE
   SINGLE FACE WALL: 21" X 11" X 8"
   DOUBLE FACE WALL: 20" X 13" X 12"

ED - BWD

ELECTRIC CONNECTION TO UNDERPASS LIGHTING

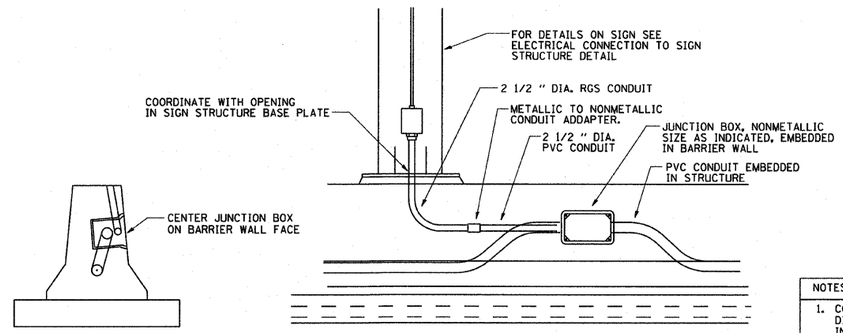

NOTES

1. CONDUIT SHALL BE 4-INCH DIAMETER UNLESS OTHERWISE INDICATED IN THE PLANS.
2. JUNCTION BOX SIZE
   SINGLE FACE WALL: 21" X 11" X 8"
   DOUBLE FACE WALL: 20" X 13" X 12"

ED - SGN

JUNCTION BOX EMBEDDED IN BARRIER WALL FOR SIGN LIGHTING

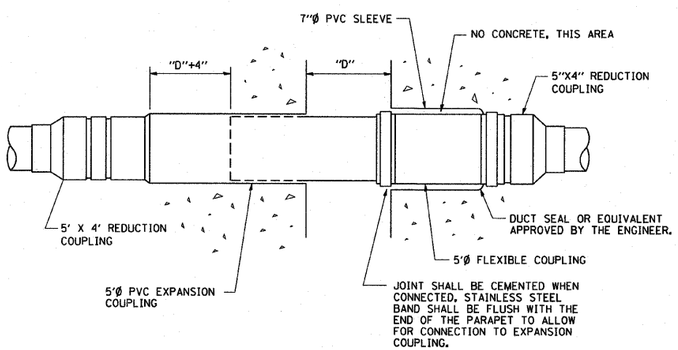

INSTALLATION OF CONDUIT

IN BRIDGE PARAPET EXPANSION JOINT

(N.T.S.)

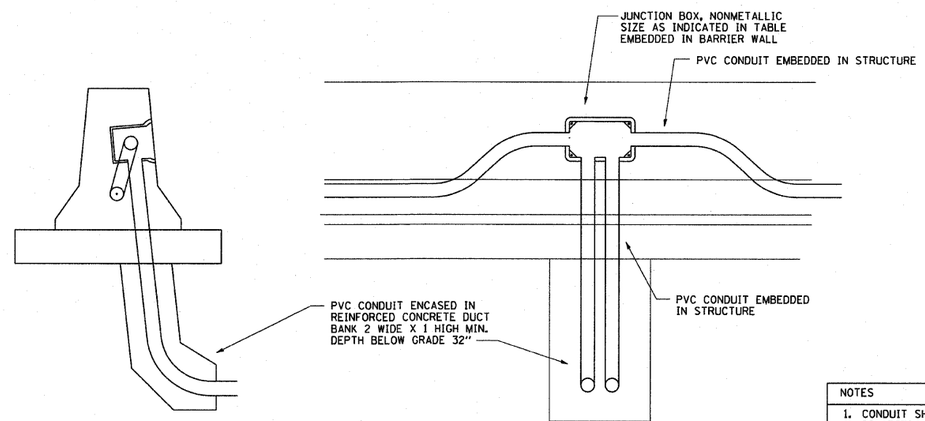

NOTES

1. CONDUIT SHALL BE 4-INCH DIAMETER UNLESS OTHERWISE INDICATED IN THE PLANS.
2. JUNCTION BOX SIZE
   SINGLE FACE WALL: 21" X 11" X 8"
   DOUBLE FACE WALL: 20" X 13" X 12"

ED - BW

JUNCTION BOX EMBEDDED IN BARRIER WALL

FILE NAME = be703.dgn	USER NAME = gaglianobt	DESIGNED -	REVISED -	STATE OF ILLINOIS DEPARTMENT OF TRANSPORTATION	MISCELLANEOUS ELECTRICAL DETAILS, SHEET B J BOX EMBEDDED IN BARRIER WALL – INSTALLATION OF CONDUIT IN BRIDGE PARAPET EXPANSION JOINT – ELECTRIC CONNECTION TO UNDERPASS LIGHTING	F.A.U. RTE.	SECTION	COUNTY	TOTAL SHEETS	SHEET NO.
		DRAWN -	REVISED -			57	1414-2B	COOK	516	334A
	PLOT SCALE = 50.0000 ' / IN.	CHECKED -	REVISED -			BE-703		CONTRACT NO. 60327		
	PLOT DATE = 2/5/2009	DATE - 01-20-2009	REVISED -		SCALE: NONE / SHEET NO. 1 OF 1 SHEETS / STA. TO STA.	FED. ROAD DIST. NO. 1	ILLINOIS	FED. AID PROJECT		