ROUTE NO.	SECTION	COUNTY	TOTAL SHEETS	SHEET NO.
FAP 323	*	**	188	908
STA.		TO STA.		
FED. RD. DIST. NO.	ILLINOIS	PROJECT		

* (145, 146) RS-2 & 147 RS-4
** DOUGLAS & EDGAR

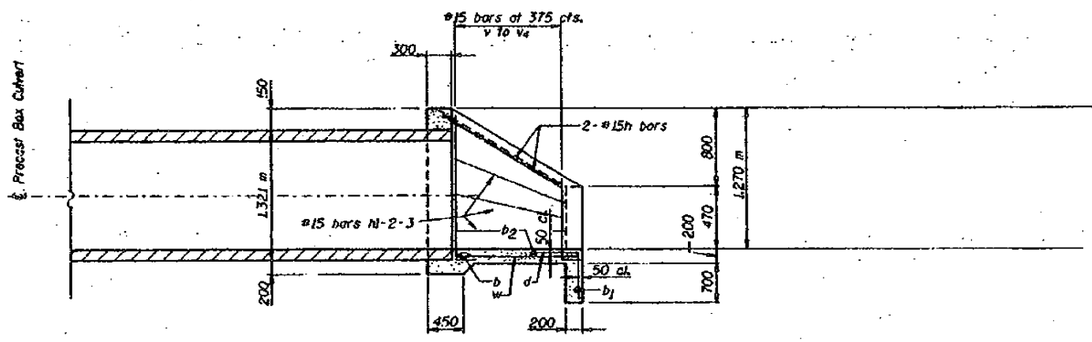

SECTION A-A

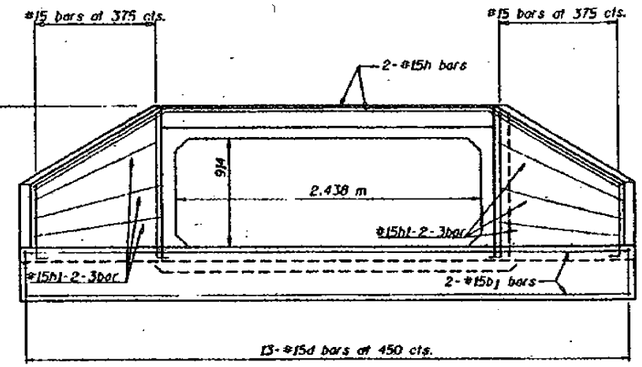

END VIEW

NOTES

All bars shall be round and shall conform to the requirements of Art. 1006.10 of the Standard Specifications.

Class SI Concrete Headwalls shall be used throughout.

Build tops of headwalls parallel to grade line.

The Precast Concrete Box Culvert Sections shall conform to the requirements of AASHTO M259.

All dimensions are in millimeters (mm) unless otherwise noted.

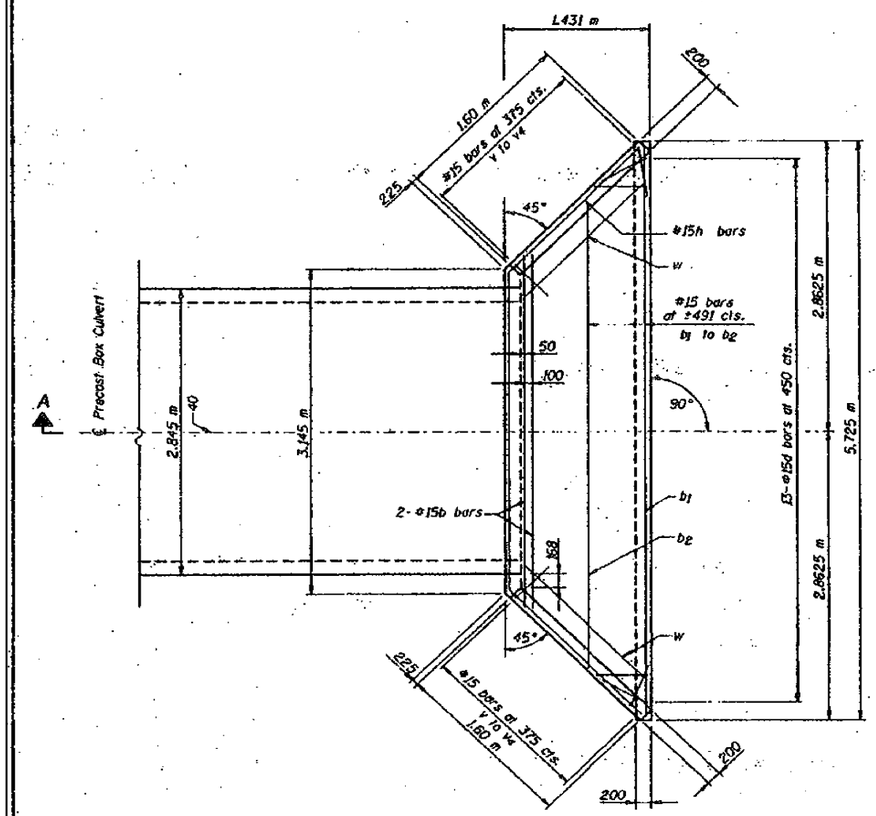

PLAN

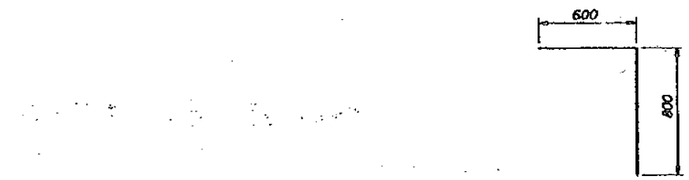

BAR d

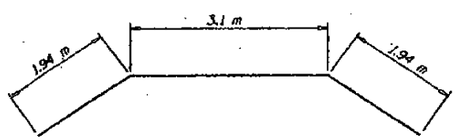

BAR h

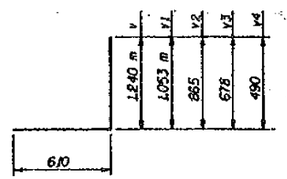

BARS v, v1, v2 etc.

BILL OF MATERIAL (ONE HEADWALL)

Bar	No.	Size	Length (m)	Shape
b	2	#15	3.75	
b1	2	#15	5.625	
b2	1	#15	4.726	
d	13	#15	1.40	
h	2	#15	6.98	
h1	2	#15	1.608	
h2	2	#15	1.546	
h3	2	#15	1.512	
v	4	#15	1.85	
v1	2	#15	1.663	
v2	2	#15	1.475	
v3	4	#15	1.288	
v4	2	#15	1.10	
w	2	#15	1.458	
Reinforcement Bars			kg	136
Class SI Conc Headwalls			Cu. m	3.0

BOX CULVERT END SECTIONS (CAST IN PLACE)
STA. 32+455.914, 34+083.786 0° SKEW

REINFORCED CONCRETE HEADWALL DETAILS

REVISIONS	
DATE	DESCRIPTION

STATE OF ILLINOIS
DEPARTMENT OF TRANSPORTATION
DIVISION OF HIGHWAYS

ILLINOIS DEPARTMENT OF TRANSPORTATION
DISTRICT 5
PARIS, ILLINOIS

DRAWN BY KEB DATE 12-99
CHECKED BY DATE
BRIDGE NUMBER
PROJECT No.
SHEET No.

FILE NAME = c:\pw_work\PWIDOT\BUCKLESJJ\d0134382\D570696-sht-details.dgn	USER NAME = bucklesjj	DESIGNED - RLA	REVISED -
		DRAWN - RLA	REVISED -
	PLOT SCALE = 40.0000 ' / IN.	CHECKED - JMS	REVISED -
	PLOT DATE = 3/22/2010	DATE - 10/23/09	REVISED -

STATE OF ILLINOIS
DEPARTMENT OF TRANSPORTATION

AS BUILT PLANS
FOR INFORMATION ONLY

SCALE: N/A | SHEET NO. 2 OF 5 SHEETS | STA. TO STA.

F.A.P. RTE.	SECTION	COUNTY	TOTAL SHEETS	SHEET NO.
323	(145,146)CR	DOUGLAS	36	11
		CONTRACT NO. 70696		
		ILLINOIS FED. AID PROJECT		