EXISTING TYPICAL SECTION

STATION	TO	STATION
161+50.12		167+63.00

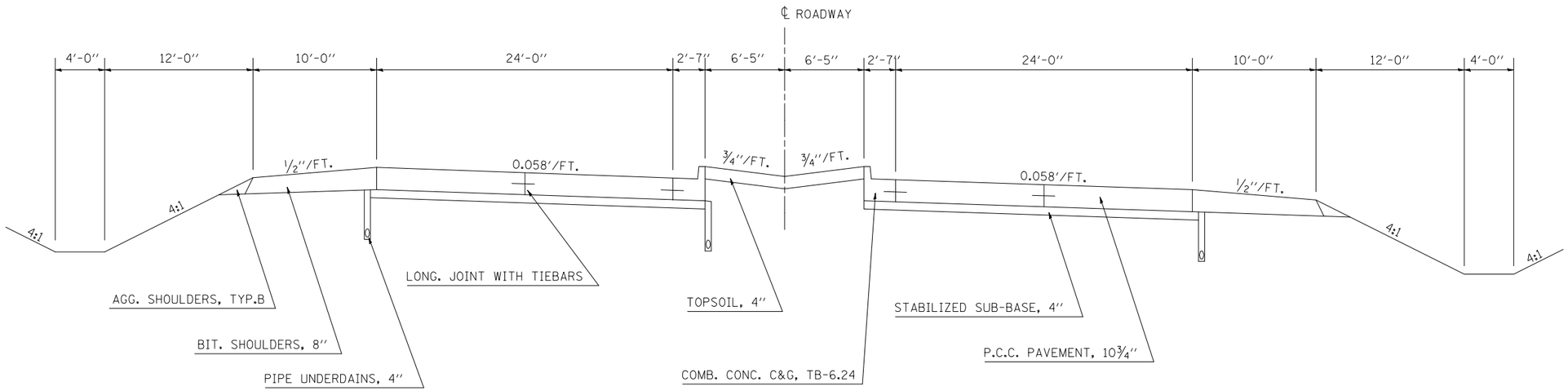

NOT TO SCALE

(10) PROPOSED TYPICAL SECTION

STATION	TO	STATION
(9) 161+50.12		167+63.00 (11)

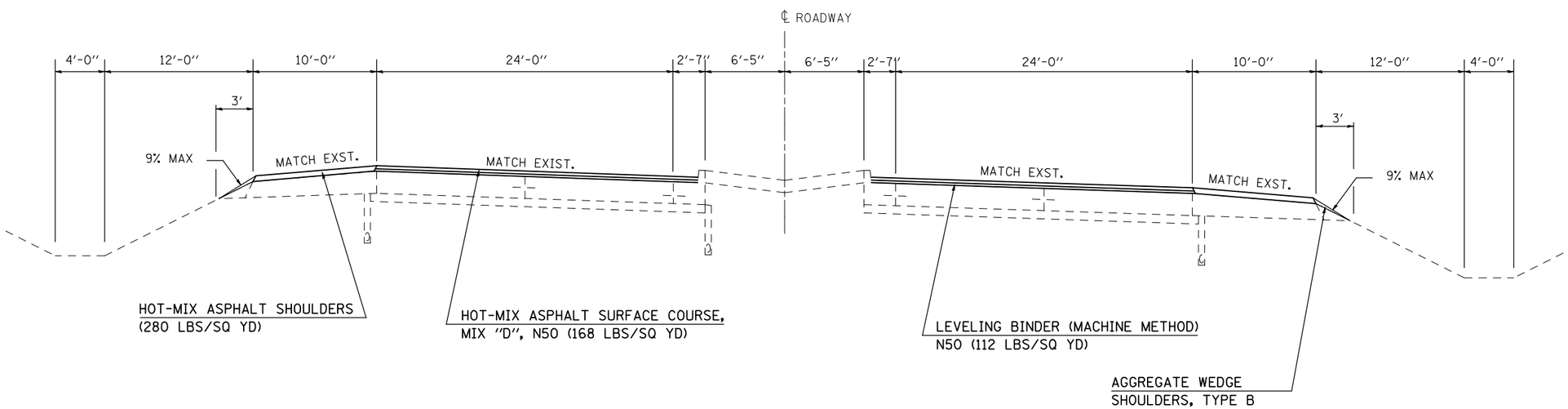

NOT TO SCALE

FILE NAME = c:\pw_work\PWIDOT\SHERERJM\d0109813\D570768-sht-typical.dgn	USER NAME = sherer jm	DESIGNED - JMS	REVISED -
		DRAWN - JMS	REVISED -
	PLOT SCALE = 100.0000 ' / IN.	CHECKED -	REVISED -
	PLOT DATE = 2/24/2010	DATE - 050609	REVISED -

STATE OF ILLINOIS
DEPARTMENT OF TRANSPORTATION

EXISTING & PROPOSED TYPICAL SECTIONS

SCALE: NO SCALE | SHEET NO. 10 OF 25 SHEETS | STA. | TO STA.

F.A.P. RTE.	SECTION	COUNTY	TOTAL SHEETS	SHEET NO.
676	(9-1,9)RS	MCLEAN	81	17
		CONTRACT NO. 70768		
FED. ROAD DIST. NO.	ILLINOIS	FED. AID PROJECT		