EXISTING TYPICAL SECTION

STATION	TO	STATION
222+65.73		223+80.73

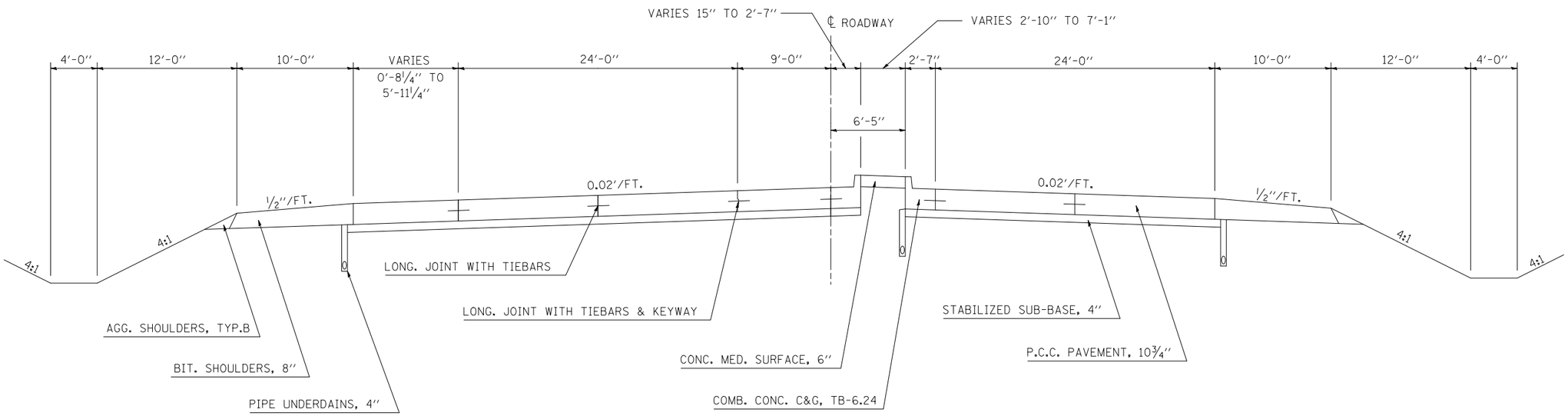

NOT TO SCALE

(18) PROPOSED TYPICAL SECTION

STATION	TO	STATION
(17) 222+65.73		223+80.73 (19)

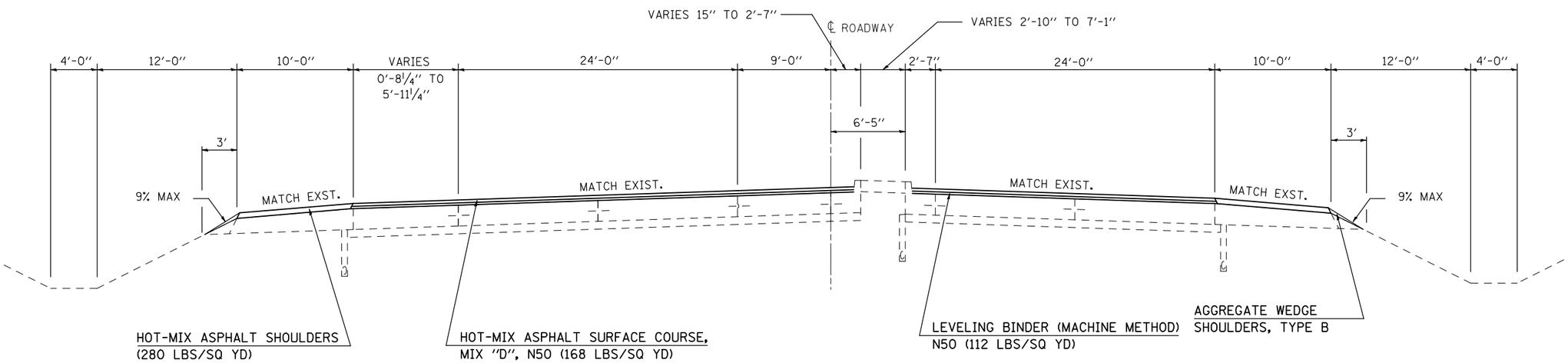

NOT TO SCALE

FILE NAME = c:\pw_work\PWIDOT\SHERERJM\d0109813\D570768-sht-typical.dgn	USER NAME = shererjm	DESIGNED - JMS	REVISED -
		DRAWN - JMS	REVISED -
	PLOT SCALE = 100.0000 ' / IN.	CHECKED -	REVISED -
	PLOT DATE = 2/25/2010	DATE - 050609	REVISED -

STATE OF ILLINOIS
DEPARTMENT OF TRANSPORTATION

EXISTING & PROPOSED TYPICAL SECTIONS

SCALE: NO SCALE | SHEET NO. 18 OF 25 SHEETS | STA. | TO STA.

F.A.P. RTE.	SECTION	COUNTY	TOTAL SHEETS	SHEET NO.
676	(9-1,9)RS	MCLEAN	81	25
		CONTRACT NO. 70768		
FED. ROAD DIST. NO.	ILLINOIS	FED. AID PROJECT		