| F.A. RTE. | SECTION | COUNTY | TOTAL SHEETS | SHEET NO. |
|---|---|---|---|---|
| * | ** | SANGAMON | 363 | 334 |

STA. 7+00.00 TO STA. 7+50.00

FED. ROAD DIST. NO. ILLINOIS FED. AID PROJECT

CONTRACT NO. 72088

* F.A.I. 72, F.A.P. 67, F.A.P. 75 & F.A.P. 668
** D-6 SPFLD-CLRLAKE DIRKSEN 2002

| FINAL SURVEY | BY | DATE |
|---|---|---|
| SURVEYED | | |
| PLOTTED | | |
| TEMPLATE | | |
| AREAS | | |
| AREAS CHECKED | | |
| NOTE BOOK NO. | | |
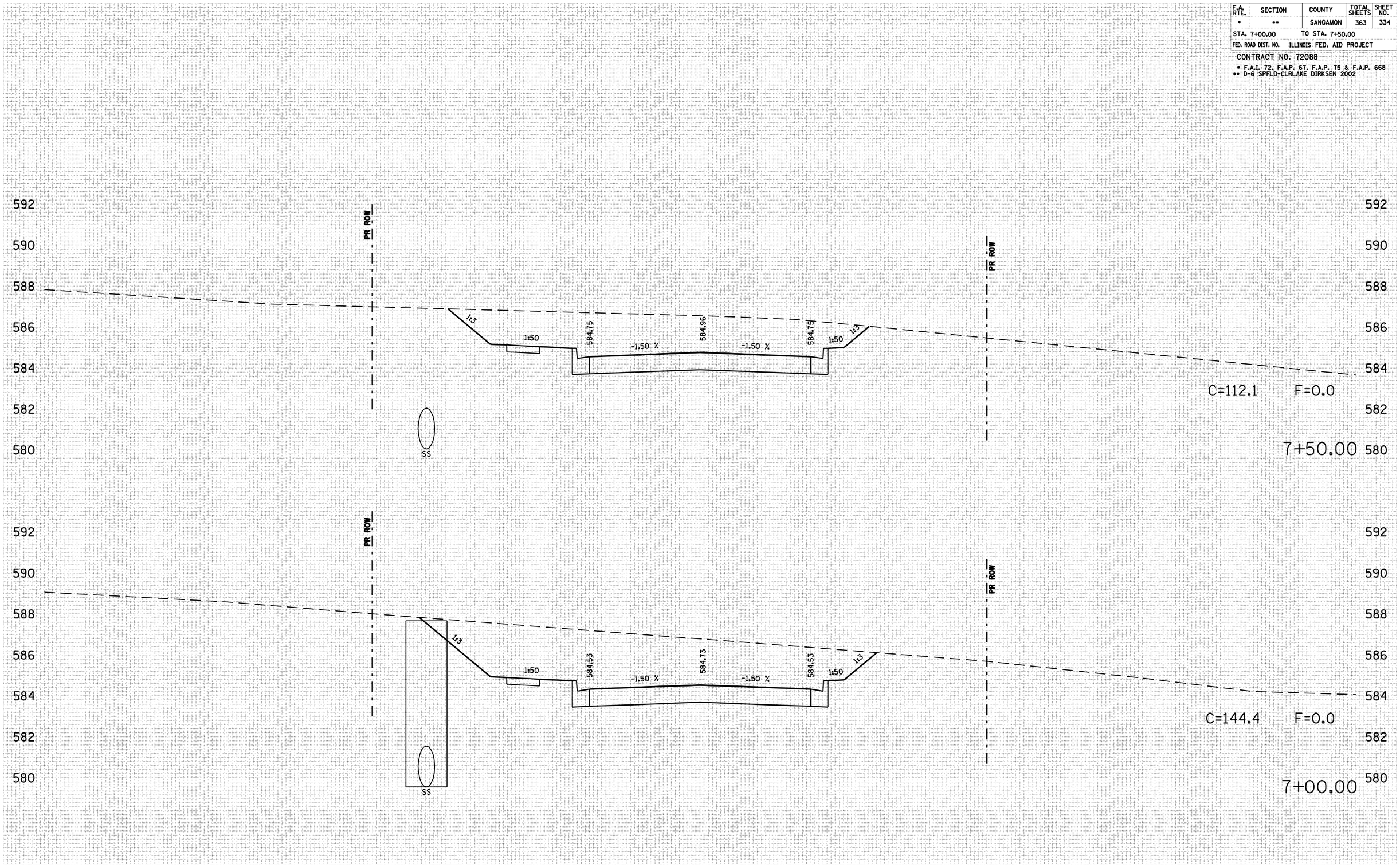
| ORIGINAL SURVEY | BY | DATE |
|---|---|---|
| SURVEYED | | |
| PLOTTED | | |
| TEMPLATE | | |
| AREAS | | |
| AREAS CHECKED | | |
| NOTE BOOK NO. | | |