F.A. RTE.	SECTION	COUNTY	TOTAL SHEETS	SHEET NO.
*	**	SANGAMON	363	335

STA. 8+00.00 TO STA. 8+50.00

FED. ROAD DIST. NO. ILLINOIS FED. AID PROJECT

CONTRACT NO. 72088

* F.A.I. 72, F.A.P. 67, F.A.P. 75 & F.A.P. 668
** D-6 SPFLD-CLRLAKE DIRKSEN 2002

FINAL SURVEY		BY	DATE
NOTE BOOK NO.	SURVEYED		
	PLOTTED		
	TEMPLATE		
	AREAS		
	AREAS CHECKED		
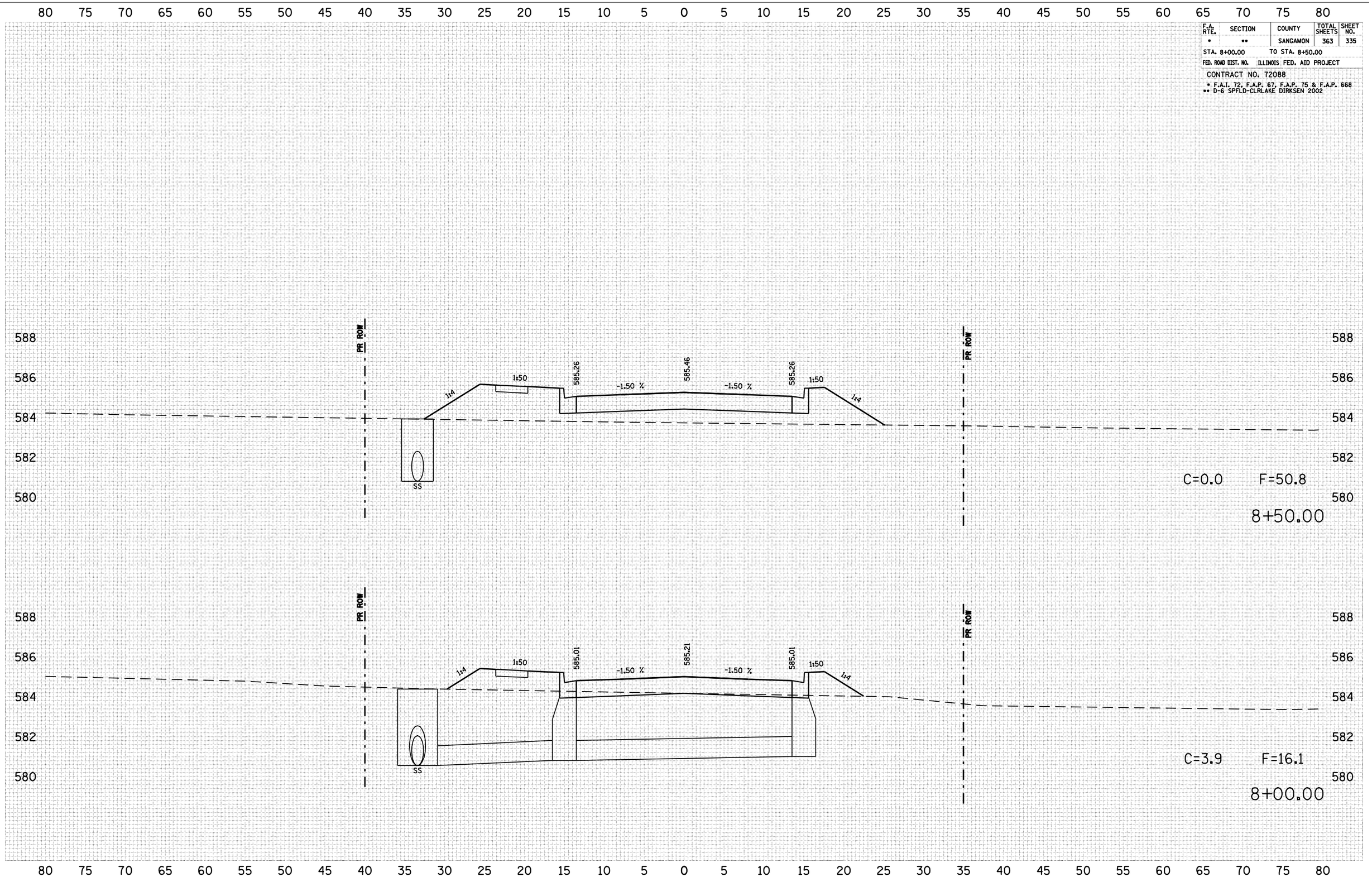
ORIGINAL SURVEY		BY	DATE
NOTE BOOK NO.	SURVEYED		
	PLOTTED		
	TEMPLATE		
	AREAS		
	AREAS CHECKED