| F.A. RTE. | SECTION | COUNTY | TOTAL SHEETS | SHEET NO. |
|---|---|---|---|---|
| * | ** | SANGAMON | 363 | 339 |

STA. 13+00.00 TO STA. 13+40.00

FED. ROAD DIST. NO. ILLINOIS FED. AID PROJECT

CONTRACT NO. 72088

* F.A.I. 72, F.A.P. 67, F.A.P. 75 & F.A.P. 668
** D-6 SPFLD-CLRLAKE DIRKSEN 2002

| FINAL SURVEY | BY | DATE |
|---|---|---|
| SURVEYED | | |
| PLOTTED | | |
| TRAVERSE | | |
| NOTE BOOK | AREAS | |
| NO. | AREAS CHECKED | |

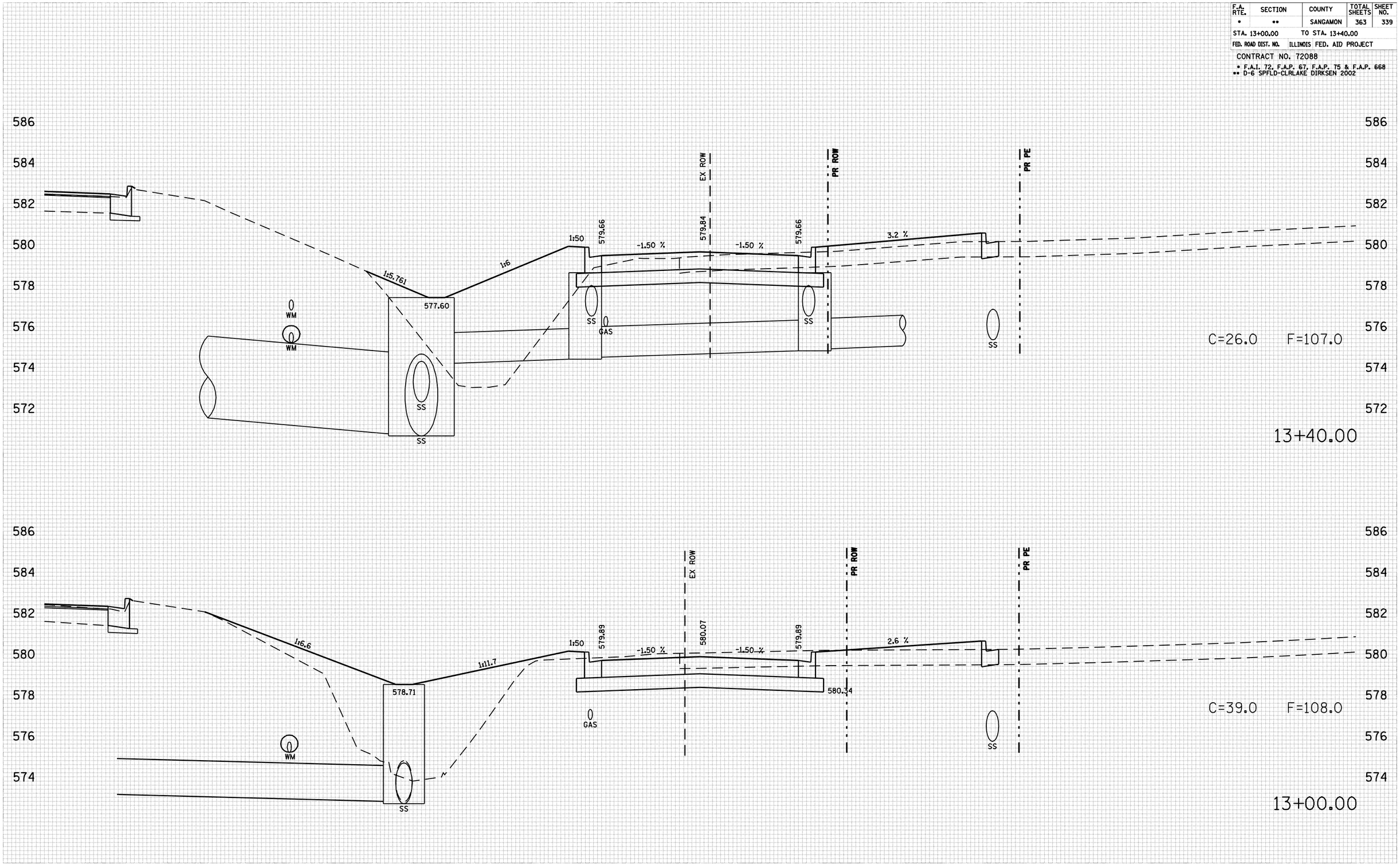


| ORIGINAL SURVEY | BY | DATE |
|---|---|---|
| SURVEYED | | |
| PLOTTED | | |
| TRAVERSE | | |
| NOTE BOOK | AREAS | |
| NO. | AREAS CHECKED | |