STATE OF ILLINOIS
DEPARTMENT OF TRANSPORTATION

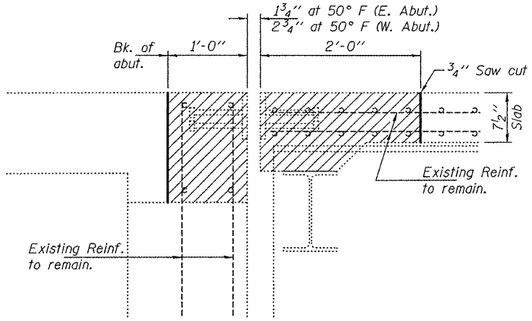


## SECTION A-A

(Near ℄ Roadway)
(Dimensions are at RT L's to end of deck)

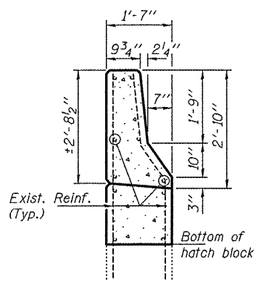


## SECTION THRU APPROACH PARAPET

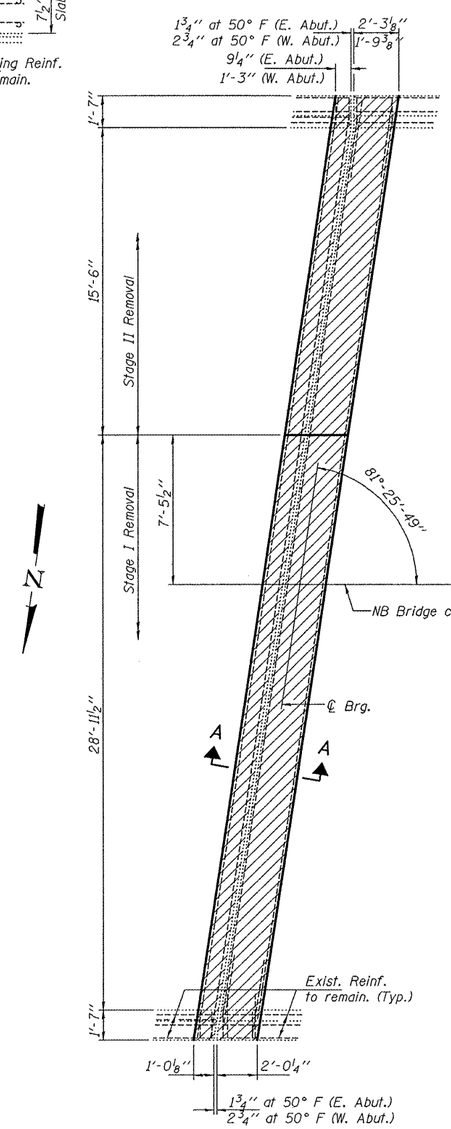


## REMOVAL PLAN

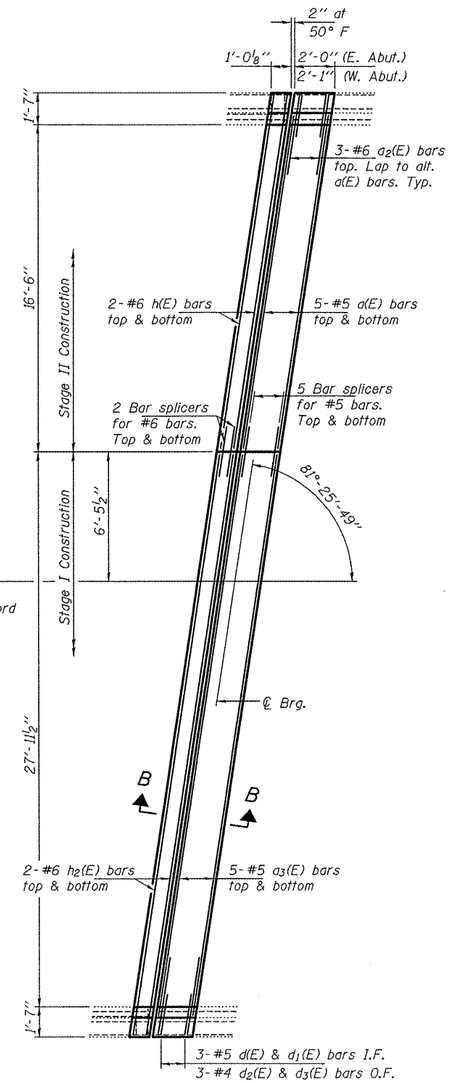


## REPLACEMENT PLAN

East abutment shown
West abutment similar by rotation.

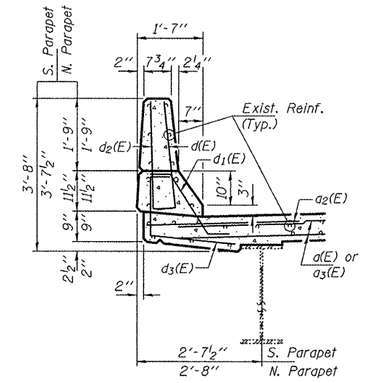


## TYPICAL PARAPET SECTION

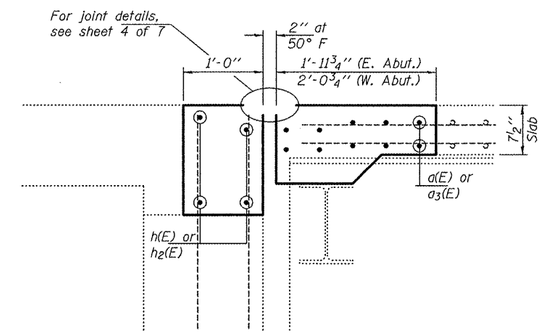


## SECTION B-B

(Near ℄ Roadway)
(Dimensions are at RT L's to end of deck)

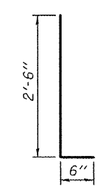


## BARS d(E) & d2(E)

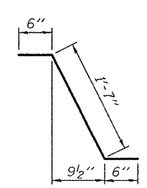


## BAR d1(E)

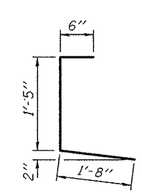


## BAR d3(E)

## BILL OF MATERIAL

| Bar | No. | Size | Length | Shape |
|---|---|---|---|---|
| d(E) | 20 | #5 | 17'-3" | |
| a2(E) | 12 | #6 | 4'-0" | |
| a3(E) | 20 | #5 | 28'-10" | |
| | | | | |
| d(E) | 12 | #5 | 3'-0" | |
| d1(E) | 12 | #5 | 2'-7" | |
| d2(E) | 12 | #4 | 3'-0" | |
| d3(E) | 12 | #4 | 3'-7" | |
| | | | | |
| h(E) | 8 | #6 | 17'-11" | |
| h2(E) | 8 | #6 | 29'-6" | |
| | | | | |
| Concrete Removal | | | Cu. Yd. | 12.1 |
| Concrete Superstructure | | | Cu. Yd. | 12.2 |
| Reinforcement Bars, Epoxy Coated | | | Lbs. | 1730 |

Notes:
Hatched areas indicate removal.

## JOINT REPLACEMENT DETAILS
## FAI 55 OVER FANCY CREEK
## SN 084-0022

| | |
|---|---|
| DESIGNED | IJL |
| CHECKED | ATH |
| DRAWN | baliva |
| CHECKED | IJL ATH |

MAY 7, 2010
EXAMINED — ENGINEER OF STRUCTURAL SERVICES
PASSED — ENGINEER OF BRIDGES AND STRUCTURES

| SHEET NO. 2 | F.A.I. RTE. | SECTION | COUNTY | TOTAL SHEETS | SHEET NO. |
|---|---|---|---|---|---|
| 7 SHEETS | 55 | 84 2(RS-3) | SANGAMON | 156 | 138 |
| | | | CONTRACT NO. 72D43 | | |
| | FED. ROAD DIST. NO. | ILLINOIS | FED. AID PROJECT | | |

Rev. 5-26-10