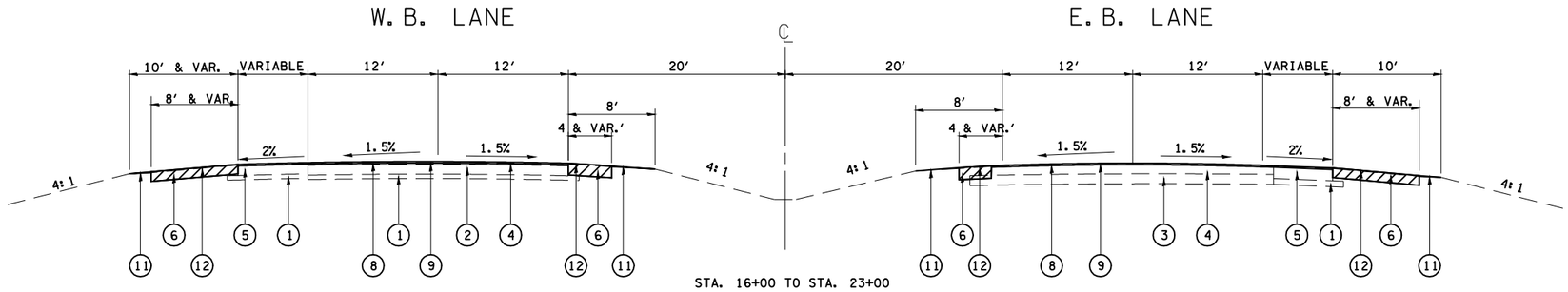

STA. 16+00 TO STA. 23+00

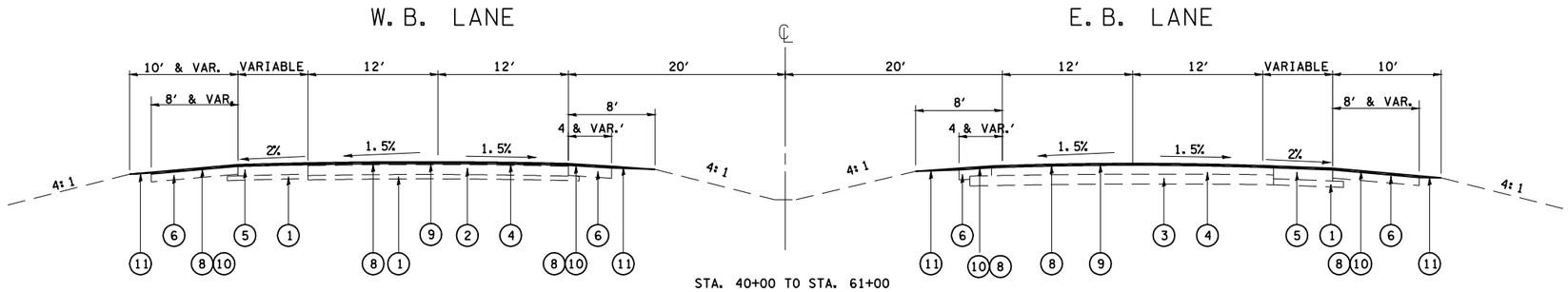

STA. 40+00 TO STA. 61+00

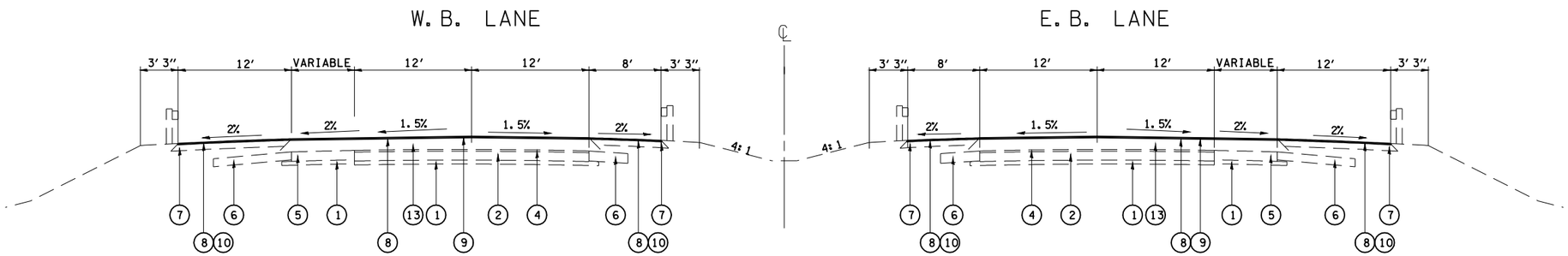

STA. 23+00 TO STA 40+00

SEE PLAN SHEETS FOR
LIMITS OF GUARDRAIL

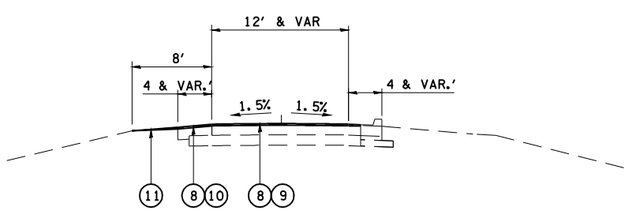

STA. 61+00 TO STA. 77+50

SANGAMON AVENUE (IL54) TYPICAL SECTION

LEGEND

1. EXIST STABILIZED SUBBASE, 4"
2. EXIST PCC PAVEMENT, 9"
3. EXIST PCC PAVEMENT
4. EXIST BITUMINOUS SURFACE
5. EXIST PCC PAVEMENT, 10"
6. EXIST BITUMINOUS SHOULDER
7. EXIST BIT SHOULDERS, 8""
8. PROP BIT SURFACE REMOVAL,2"
9. PROP BIT SURFACE, 2"
10. PROP BIT SHOULDERS, 2"
11. PROP AGG SHOULDERS, 3" to 1"
12. PROP BIT SHOULDERS, 8"

FILE NAME =	USER NAME = laughlinrl	DESIGNED -	REVISED -	STATE OF ILLINOIS DEPARTMENT OF TRANSPORTATION	TYPICAL SECTIONS SANGAMON AVE			F.A.I. RTE.	SECTION	COUNTY	TOTAL SHEETS / SHEET NO.
c:\pw_work\PWIDOT\LAUGHLINRL\d0176540\D72D43-sht-typical.dgn		DRAWN -	REVISED -					55	84-2(RS-3)	SANGAMON	156 / 37
	PLOT SCALE = 13.3333 ' / IN.	CHECKED -	REVISED -							CONTRACT NO. 72D43	
	PLOT DATE = Apr-29-2010 07:38:33AM	DATE -	REVISED -		SCALE:	SHEET NO. OF SHEETS	STA. TO STA.		ILLINOIS	FED. AID PROJECT	