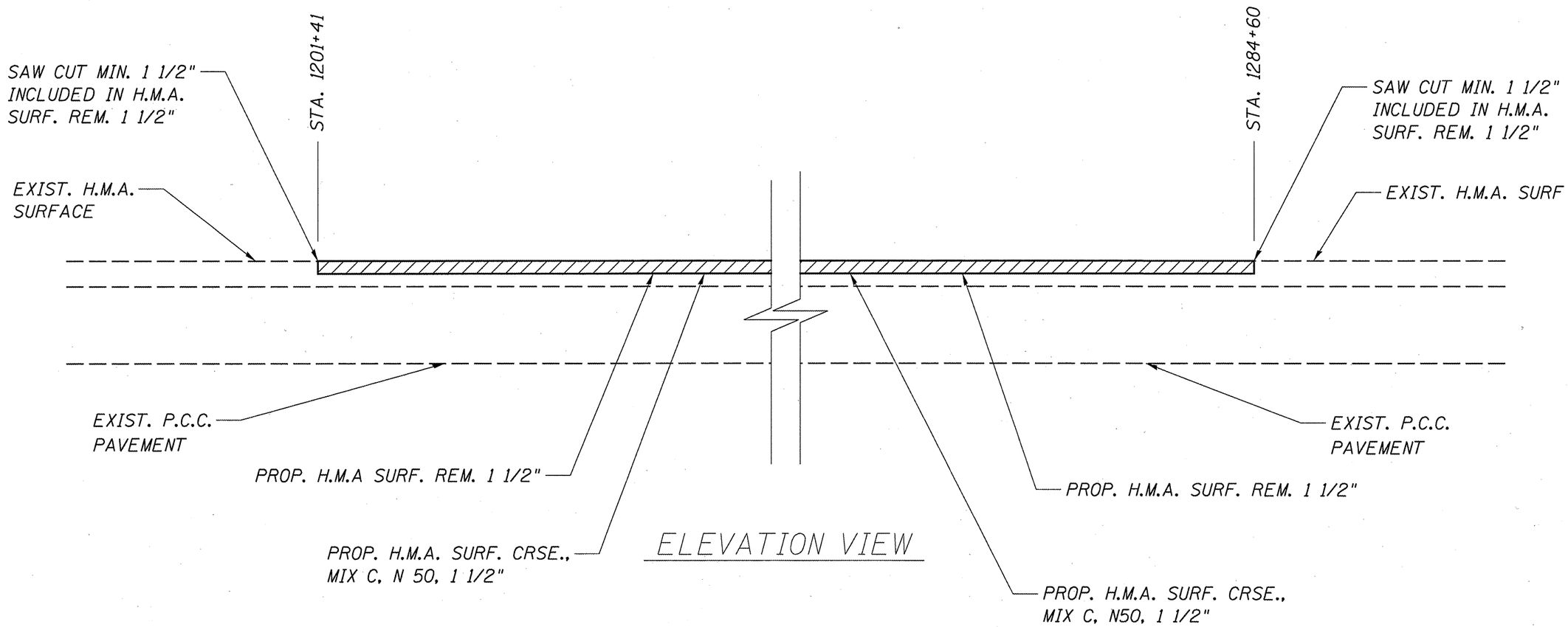

ELEVATION VIEW

BUTT JOINT
FAU 8141 (OLD US 66)
SECTION (23) RS-3,I-1
MACOUPIN COUNTY