STATE OF ILLINOIS
DEPARTMENT OF TRANSPORTATION

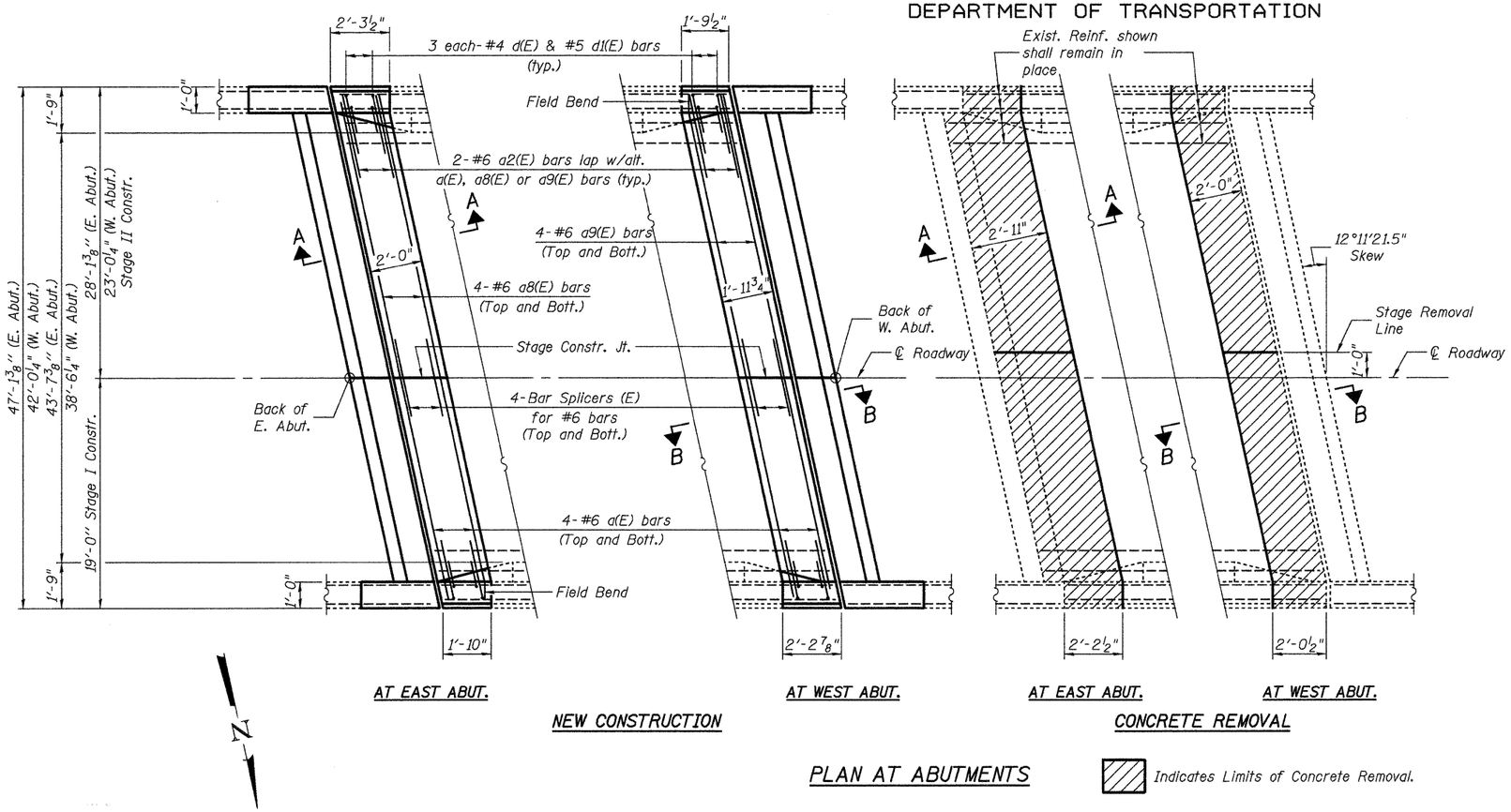

PLAN AT ABUTMENTS

Indicates Limits of Concrete Removal.

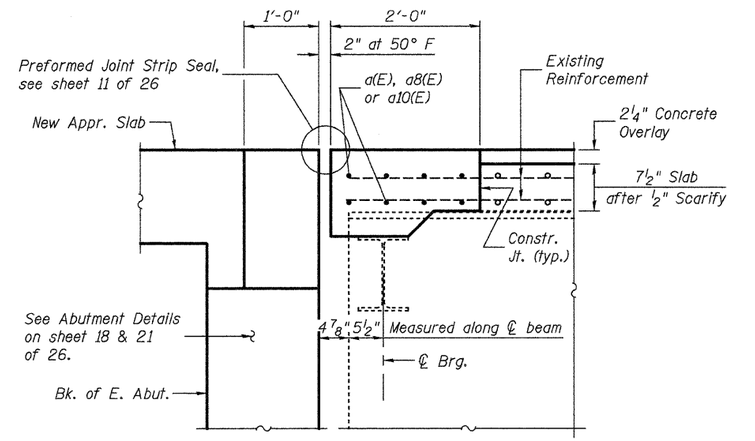

PROPOSED SECTION A-A

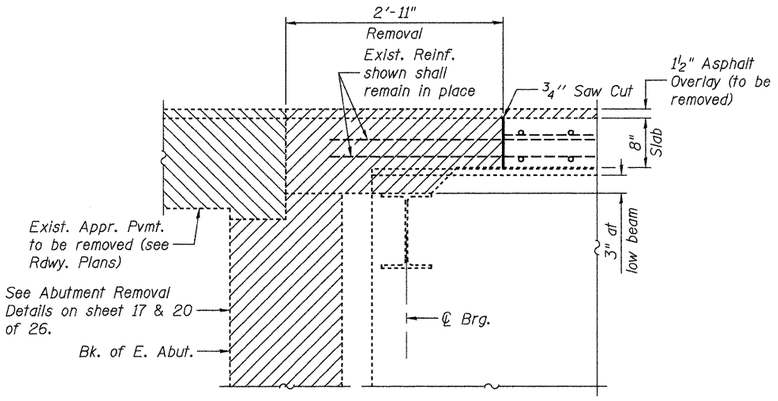

EXISTING SECTION A-A

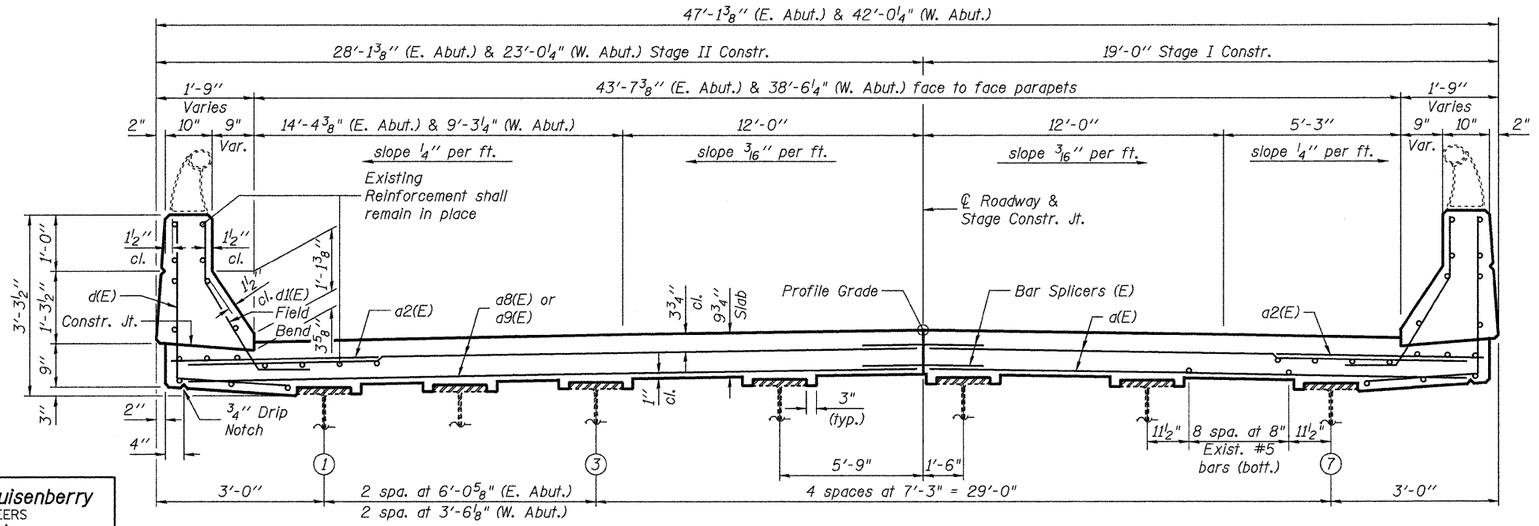

CROSS SECTION
(Looking West)

Notes:
For Section B-B see sheet 8 of 26.

For Parapet Details and Bill of Material see sheet 10 of 26.

Johnson, Depp & Quisenberry
CONSULTING ENGINEERS
Springfield, Illinois

DESIGNED:	JDQ	DRAWN:	PTR
CHECKED:	DCD	CHECKED:	DCD

SUPERSTRUCTURE (SB)
STRUCTURE NO. 058-0101(NB) & 0102(SB)

SHEET 5 OF 26	F.A.P. RTE.	SECTION	COUNTY	TOTAL SHEETS	SHEET NO.
	322	(58-20)RS	MACON	151	70
		STA. 133+62.02	CONTRACT NO. 74150		
	FED. ROAD DIST. NO.	ILLINOIS	FED. AID PROJECT		

FILE: J:\JDQ\110177 IL-D7VV#8 US51Bridge Repairs\I-US51bus-ICRR\0580101-74150-005-superstr2-SB.dgn
USER: DCD
DATE: 04/09/2010 12:21:14