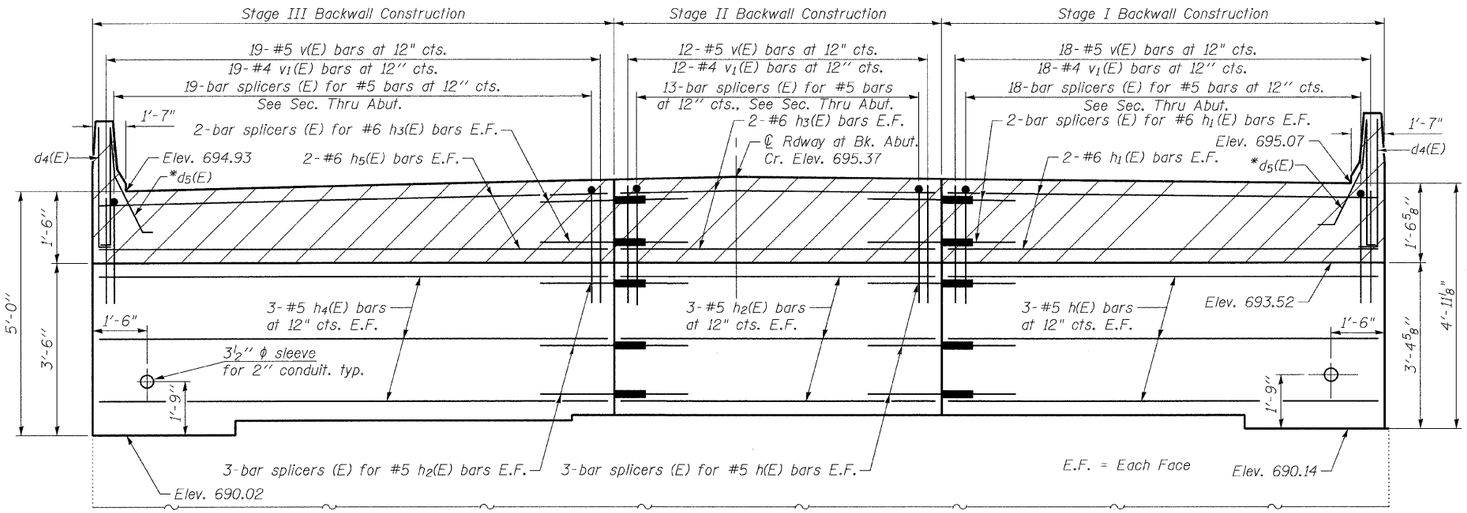


## ELEVATION
(Looking South)

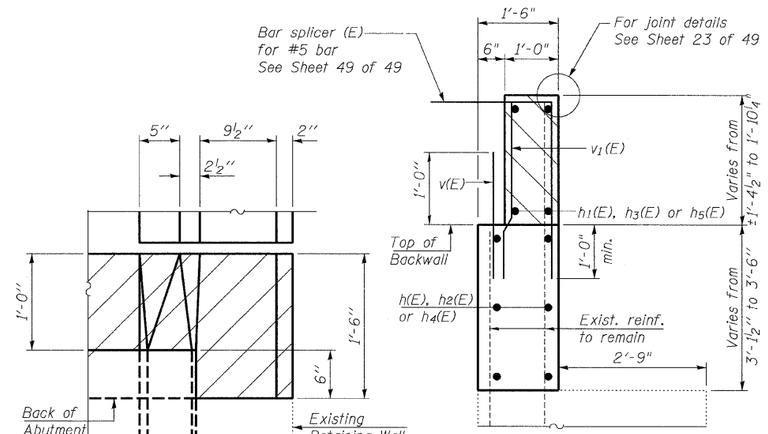


## VIEW B-B
West End Similar

## SECTION THRU ABUTMENT

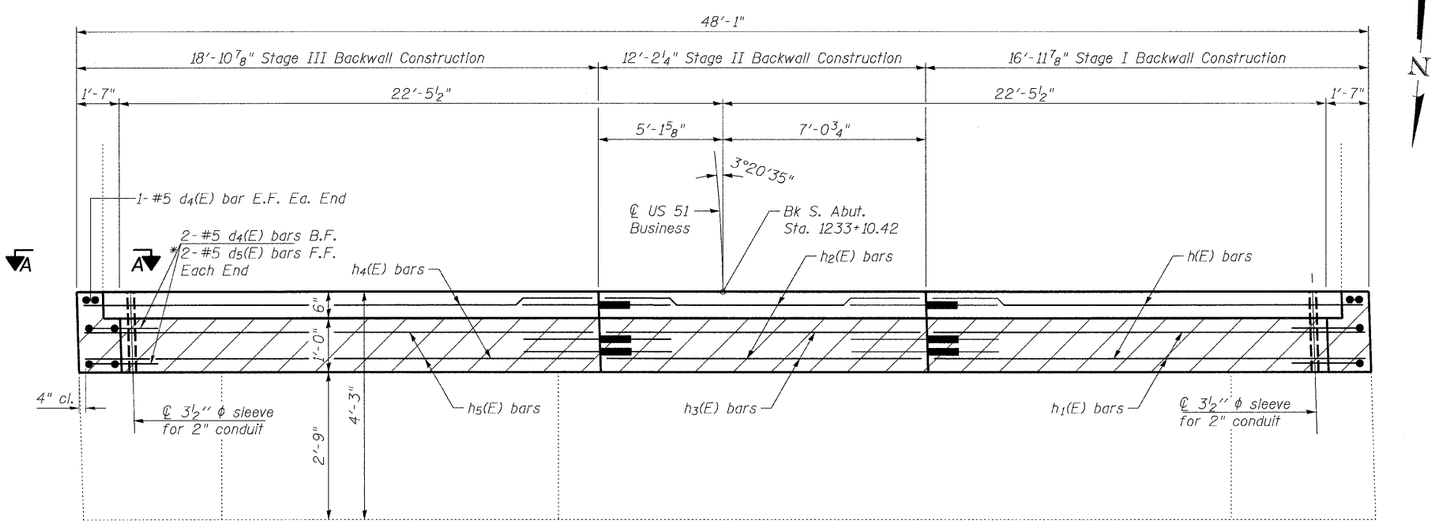


## TOP VIEW

*Bend d5(E) bars to fit

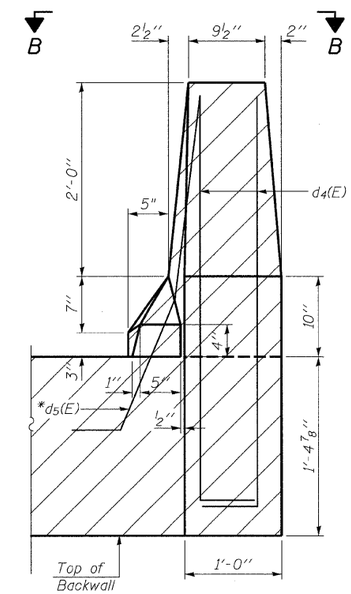


## VIEW A-A

Note:
Hatched area to be poured after superstructure falsework has been removed. Quantity included with Concrete Superstructure.
Concrete Sealer shall be applied to the exposed surfaces of the backwall and hatched area.
Cost of sleeves in backwall is included in Concrete Structures.

## BILL OF MATERIAL

| Bar | No. | Size | Length | Shape |
|---|---|---|---|---|
| d4(E) | 8 | #5 | 4'-7" | |
| d5(E) | 4 | #5 | 4'-0" | |
| | | | | |
| h(E) | 6 | #5 | 16'-8" | |
| h1(E) | 4 | #6 | 16'-8" | |
| h2(E) | 6 | #5 | 11'-10" | |
| h3(E) | 4 | #6 | 11'-10" | |
| h4(E) | 6 | #5 | 18'-8" | |
| h5(E) | 4 | #6 | 18'-8" | |
| | | | | |
| v(E) | 49 | #5 | 2'-0" | |
| v1(E) | 49 | #4 | 3'-7" | |
| | | | | |
| Structure Excavation | | | Cu. Yd. | 80 |
| Concrete Structures | | | Cu. Yd. | 8.8 |
| Reinforcement Bars, Epoxy Coated | | | Pound | 850 |
| Bar Splicers | | | Each | 70 |
| Concrete Sealer | | | Sq. Ft. | 255 |

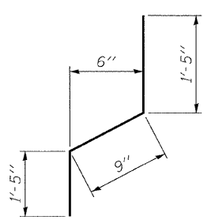


## BAR v1(E)

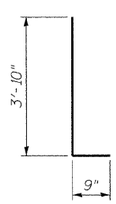


## BAR d4(E)

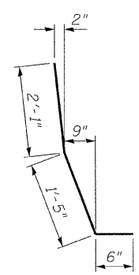


## BAR d5(E)

Coombe-Bloxdorf P.C.
-CIVIL ENGINEERS-
-STRUCTURAL ENGINEERS-
-LAND SURVEYORS-
Design Firm License No. 184-002703

| | |
|---|---|
| PROJECT NO. | 07086 |
| SCALE | |
| DATE | / / |
| DESIGN BY | |
| DRAWN BY | CFC |
| CHECKED BY | GB/CME/MCB |

## SOUTH ABUTMENT DETAILS
## STRUCTURE NO. 058-0014

| SHEET NO. 35 | F.A.P. RTE. | SECTION | COUNTY | TOTAL SHEETS | SHEET NO. |
|---|---|---|---|---|---|
| 49 SHEETS | 710 | (50Z-VB)BR | MACON | 79 | 61 |
| | | | CONTRACT NO. 74215 | | |
| | FED. ROAD DIST. NO. 7 | ILLINOIS | FED. AID PROJECT | | |