STATE OF ILLINOIS
DEPARTMENT OF TRANSPORTATION

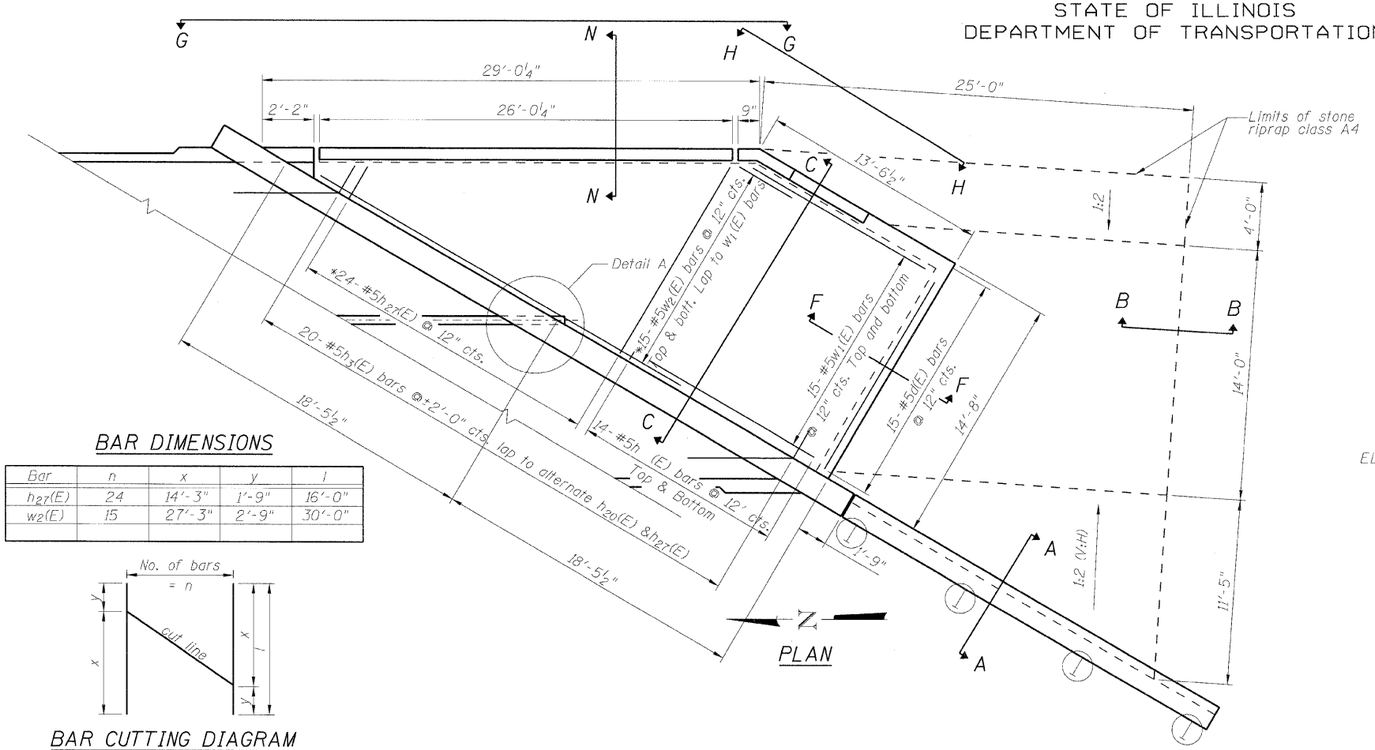

PLAN

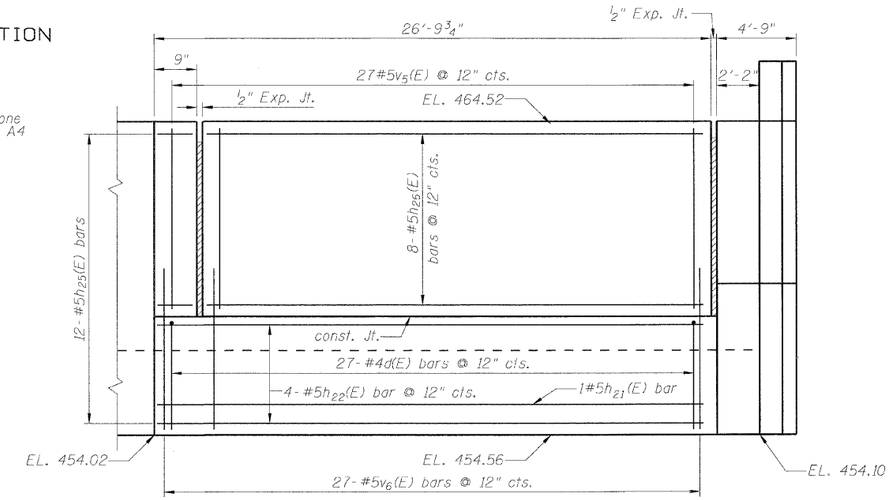

SECTION G-G

BAR DIMENSIONS

Bar	n	x	y	l
$h_{27}(E)$	24	14'-3"	1'-9"	16'-0"
$w_2(E)$	15	27'-3"	2'-9"	30'-0"

BAR CUTTING DIAGRAM

*$h_{27}(E)$ & $w_2(E)$

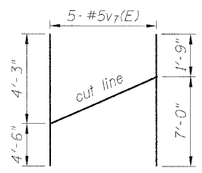

BAR CUTTING DIAGRAM

**$v_7(E)$

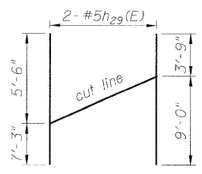

BAR CUTTING DIAGRAM

**$h_{29}(E)$

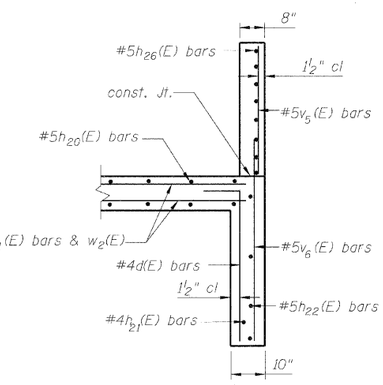

SECTION N-N

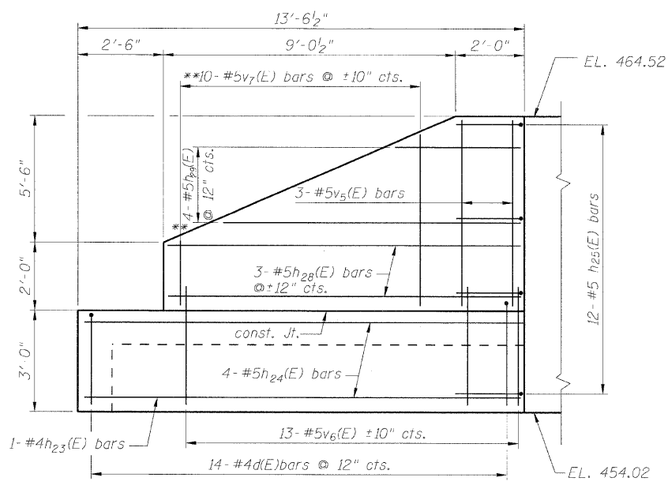

SECTION H-H

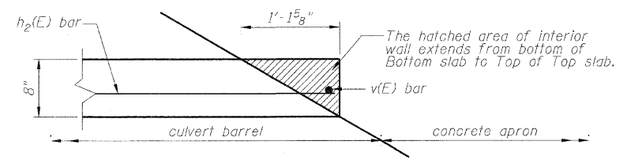

DETAIL A

BILL OF MATERIAL

Bar	No.	Size	Length	Shape
d(E)	56	#4	4'-6"	
$h_{20}(E)$	28	#5	14'-5"	
$h_{21}(E)$	1	#4	26'-5"	
$h_{22}(E)$	4	#5	26'-5"	
$h_{23}(E)$	1	#4	13'-2"	
$h_{24}(E)$	4	#5	13'-2"	
$h_{25}(E)$	12	#5	2'-4"	
$h_{26}(E)$	8	#5	25'-8"	
$h_{27}(E)$	24	#5	16'-0"	
$h_{28}(E)$	3	#5	10'-8"	
$h_{29}(E)$	2	#5	12'-9"	
$v_5(E)$	30	#5	7'-2"	
$v_6(E)$	39	#5	4'-9"	
$v_7(E)$	5	#5	8'-9"	
$w_1(E)$	30	#5	13'-6"	
$w_2(E)$	15	#5	30'-0"	
Stone Riprap class A4			Sq. Yd.	48.0
Filter Fabric			Sq. Yd.	80.0
Concrete Structures			Cu. Yd.	23.0
Reinforcement Bars (Epoxy coated)			Pound	2840

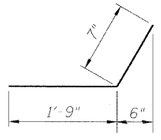

BAR $h_{25}(E)$

DESIGNED	KRG
CHECKED	MJK
DRAWN	GSJ
CHECKED	MJK

Min. bar laps
(unless noted otherwise)
5 bar = 1'-8"

Note:

For sections AA, BB, C-C and F-F see sheet 8 of 15.

For Expansion Jt. detail see sheet 7 of 15.

Lap alternate $h_{20}(E)$ & $h_{27}(E)$ bars at top layer of apron to $h_3(E)$ bars projecting from culvert Bottom slab.

* Order bars $h_{27}(E)$, $w_2(E)$ bars full length cut as shown and use remainder in the opposite face.

** Order bars $v_7(E)$ & $h_{29}(E)$ bars full length cut as shown and use remainder in other half.

MID-AMERICA ENGINEERING SERVICES

DOWNSTREAM APRON & DIVERSION WALLS
STRUCTURE NO: 082-2044

SHEET NO. 9	F.A.P. RTE.	SECTION	COUNTY	TOTAL SHEETS	SHEET NO.
15 SHEETS	600	60-(30,31,128)-1	St. Clair	399	250
	STRUCTURE NO: 082-2044		CONTRACT NO. 76830		
	FED. ROAD DIST. NO. _	ILLINOIS	FED. AID PROJECT		