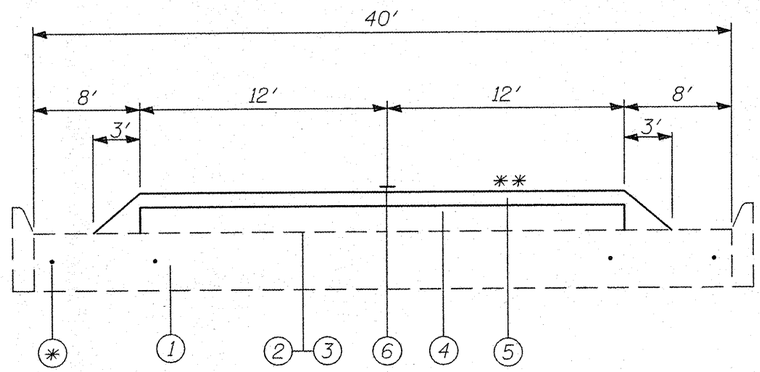

STA 0+00 TO 15+25

* The concrete pavement may have longitudinal reinforcement ($^7/_8$" smooth bars) as shown in the sections.

** Match existing cross slope

1. Existing Portland Cement Concrete Pavement - 8"
2. Proposed Bituminous Materials (Prime Coat)
3. Proposed Aggregate (Prime Coat)
4. Proposed Leveling Binder (Machine Method), N70 - 1"
5. Proposed HMA Surface Course, Mix "C", N70 - 1 1/2"
6. Pavement Marking Line

FILE NAME = c:\pw_work\pwidot\watersla\d0175127\d876085-sht-plan.dgn	USER NAME = watersla	DESIGNED - ___	REVISED - ___
		DRAWN - ___	REVISED - ___
	PLOT SCALE = 100.0000 ' / IN.	CHECKED - ___	REVISED - ___

STATE OF ILLINOIS
DEPARTMENT OF TRANSPORTATION

TYPICAL SECTION LOCATION # 3

SCALE: | SHEET NO. 3 OF 4 SHEETS | STA. | TO STA.

F.A. RTE.	SECTION	COUNTY	TOTAL SHEETS	SHEET NO.
VAR.	DIST. 8 RES. 2010-6	ST. CLAIR	15	7

CONTRACT NO. 76D85

FED. ROAD DIST. NO. 8 | ILLINOIS | FED. AID PROJECT