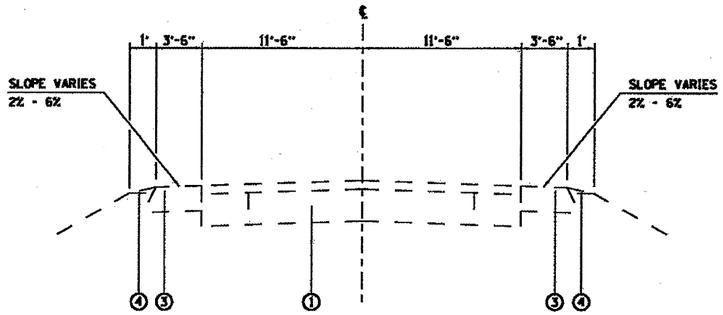

LOCATION 3
EXISTING TYPICAL SECTION
STA. 86+24 TO STA. 91+22

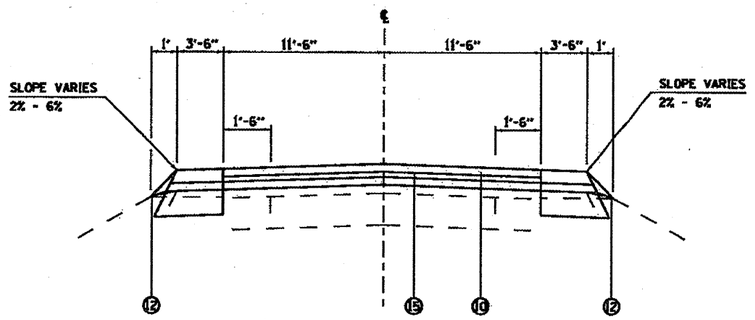

LOCATION 3
PROPOSED TYPICAL SECTION
STA. 86+24 TO STA. 91+22

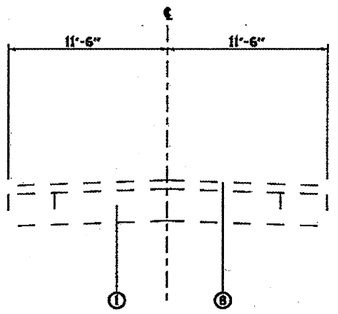

LOCATION 3
EXISTING TYPICAL SECTION
STA. 91+22 TO STA. 133+70

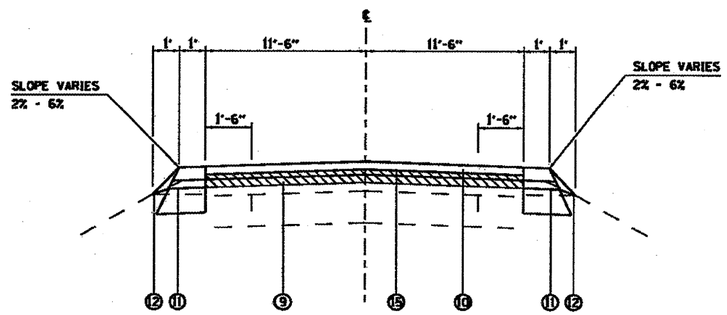

LOCATION 3
PROPOSED TYPICAL SECTION
STA. 91+22 TO STA. 133+70

LEGEND

- ① EXISTING PCC PAVEMENT
- ③ EXISTING HMA SHOULDER
- ④ EXISTING AGGREGATE SHOULDER
- ⑤ EXISTING HMA PAVEMENT
- ⑦ EXISTING BASE COURSE WIDENING
- ⑧ EXISTING HMA SURFACE
- ⑨ PROPOSED HMA REMOVAL, 1 1/2 "
- ⑩ PROPOSED HMA SURFACE COURSE, 1 1/2 "
- ⑪ PROPOSED HMA SHOULDER, 6"
- * ⑫ PROPOSED AGGREGATE WEDGE SHOULDER
- ⑬ PROPOSED HMA SHOULDER
- ⑭ PROPOSED HMA LEVELING BINDER, 1"
- ⑮ PROPOSED HMA LEVELING BINDER, 3/4 "

* A QUANTITY FOR AGGREGATE WEDGE SHOULDER HAS BEEN INCLUDED TO BE USED AT THE DISCRETION OF THE ENGINEER TO ELIMINATE DROP OFFS AT THE EDGE OF HMA SHOULDER.

FILE NAME =	USER NAME = elfordb	DESIGNED -	REVISED -	STATE OF ILLINOIS DEPARTMENT OF TRANSPORTATION	TYPICAL SECTIONS	F.A.P RTE.	SECTION	COUNTY	TOTAL SHEETS / SHEET NO.
		DRAWN -	REVISED -			VARIOUS	DISTBRESURFACING2010-4	ST. CLAIR	49 / 12
	PLOT SCALE = 100.0000 ' / IN.	CHECKED -	REVISED -					CONTRACT NO. 76D86	
	PLOT DATE = 4/23/2010	DATE -	REVISED -		SCALE: SHEET NO. OF SHEETS STA. TO STA.	FED. ROAD DIST. NO.	ILLINOIS	FED. AID PROJECT	