STATE OF ILLINOIS
DEPARTMENT OF TRANSPORTATION

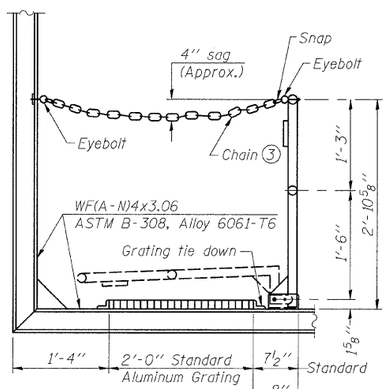

SIDE ELEVATION
(Showing Safety Chain W/O Sign)

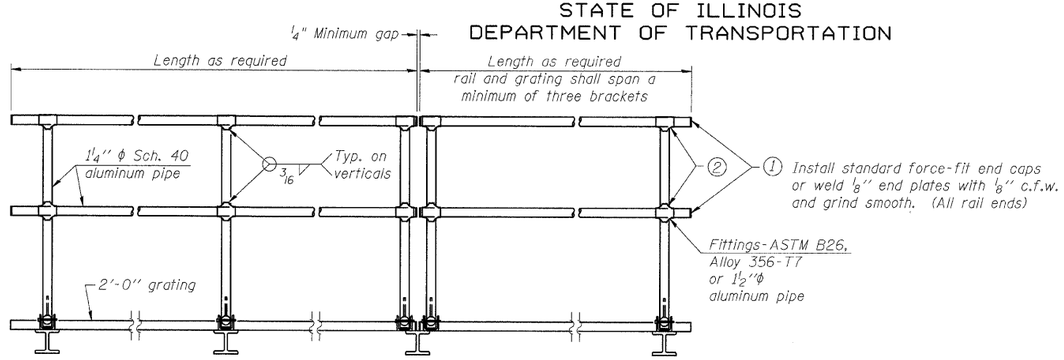

FRONT ELEVATION

(2) Horizontal handrail member shall be continuous thru fitting. Provide 7/16" ϕ hole in fitting for 3/8" ϕ bolt. Field drill 7/16" ϕ hole in horizontal rail member. Provide locknut and two stainless steel washers for bolt. (Use 5/16" eyebolts in 7/16" ϕ holes on top rail at ends only.)

HANDRAIL DETAILS

Handrail pipe shall be ASTM B241 or B429, Alloy 6063-T6 or Alloy 6061-T6.

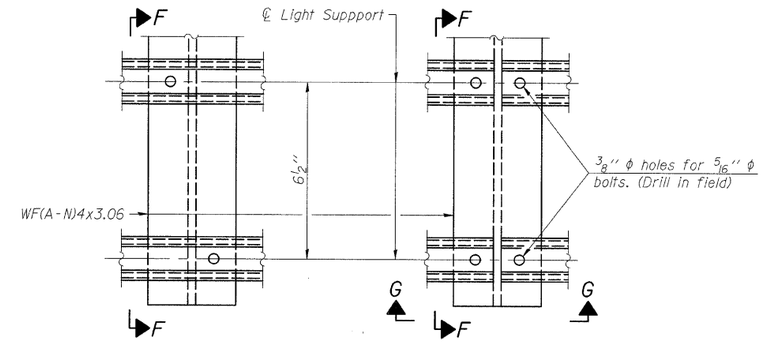

DETAIL F

DETAIL G

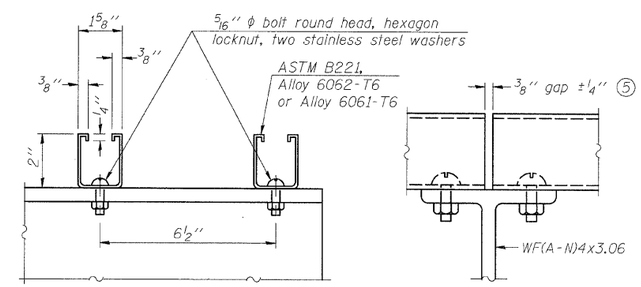

SECTION F-F

SECTION G-G

LIGHTING FIXTURE MOUNTS (IF REQUIRED)

(5) Field cut ends of light support channels shall be free of burrs or hazardous projections and coated with zinc-rich primer or equivalent.

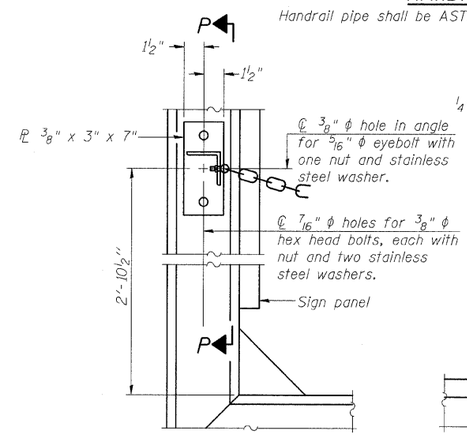

ALTERNATE SAFETY CHAIN ATTACHMENT
(With Sign Present)
Items not shown same as "Side Elevation" of "Handrail Details"

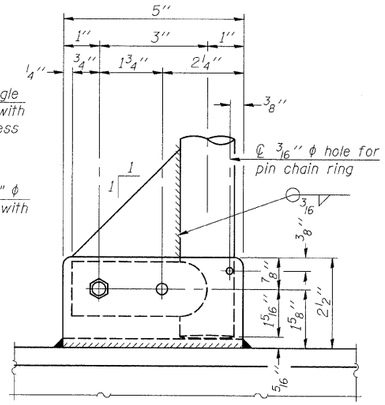

SIDE ELEVATION

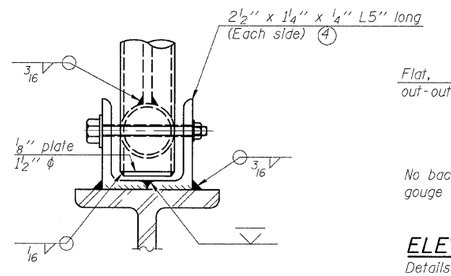

FRONT ELEVATION
Details not shown same as "ELEVATION" at right.

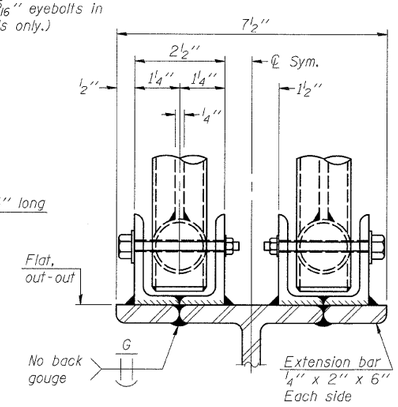

ELEVATION AT HANDRAIL JOINT (4)
Details not shown same as "FRONT ELEVATION"

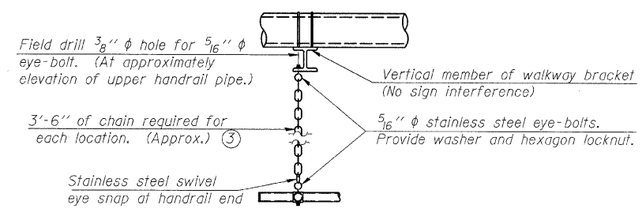

SAFETY CHAIN
One required for each end of each walkway.

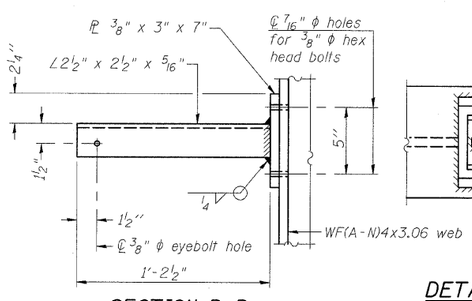

SECTION P-P

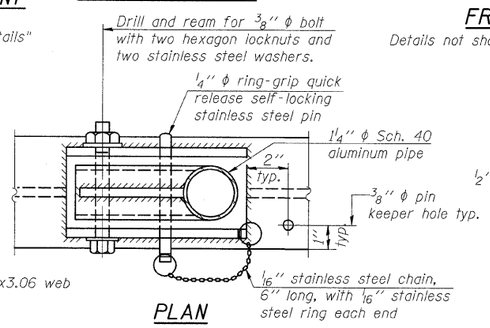

PLAN
DETAIL E HANDRAIL HINGE

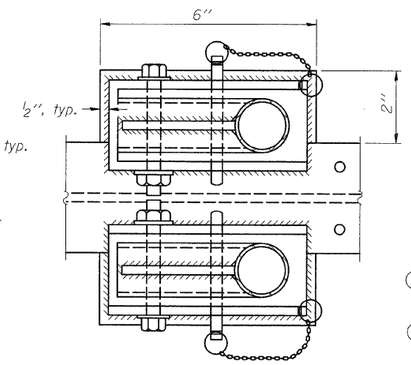

PLAN AT HANDRAIL JOINT
Details not shown same as "PLAN"

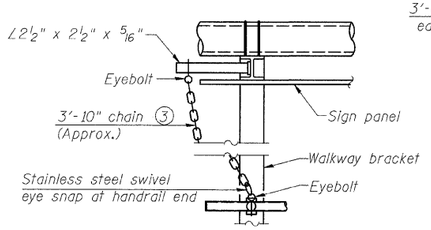

ALTERNATE SAFETY CHAIN ATTACHMENT
Details not shown similar to "Safety Chain" Details (Walkway omitted for clarity)

(3) 3/16" Type 304L stainless steel chain, approximately 12 links per foot.

(4) Extrusions may be used in lieu of the details shown, with approval of the Engineer.

DESIGNED	KLH
CHECKED	JJD
DRAWN	KLH
CHECKED	JJD

OSC-A-8 12-1-08

NUMBER	REVISION	DATE

HORNER & SHIFRIN, INC. ENGINEERS

SHEET NO. 8
9 SHEETS

CANTILEVER SIGN STRUCTURES
HANDRAIL DETAILS
ALUMINUM TRUSS & STEEL POST

F.A.I. ROUTE 270 (I-270), SEC. 60-2RS-3
MADISON COUNTY

F.A.I. RTE.	SECTION	COUNTY	TOTAL SHEETS	SHEET NO.
270	60-2RS-3	MADISON	231	120
		CONTRACT NO. 76D87		
	ILLINOIS	FED. AID PROJECT		