TENON TOP FOR VERTICAL MOUNTED LUMINAIRES

Note: The tenon top shall support a bullhorn fitting with two (twin) vertically mounted luminaires (clamp-mounted bullhorn assembly with removable pole cap acceptable). Each luminaire shall weigh 100 lb (45 kg) and have an effective projected (EPA) area of 3.85 sq. ft. (0.36 sq. m).

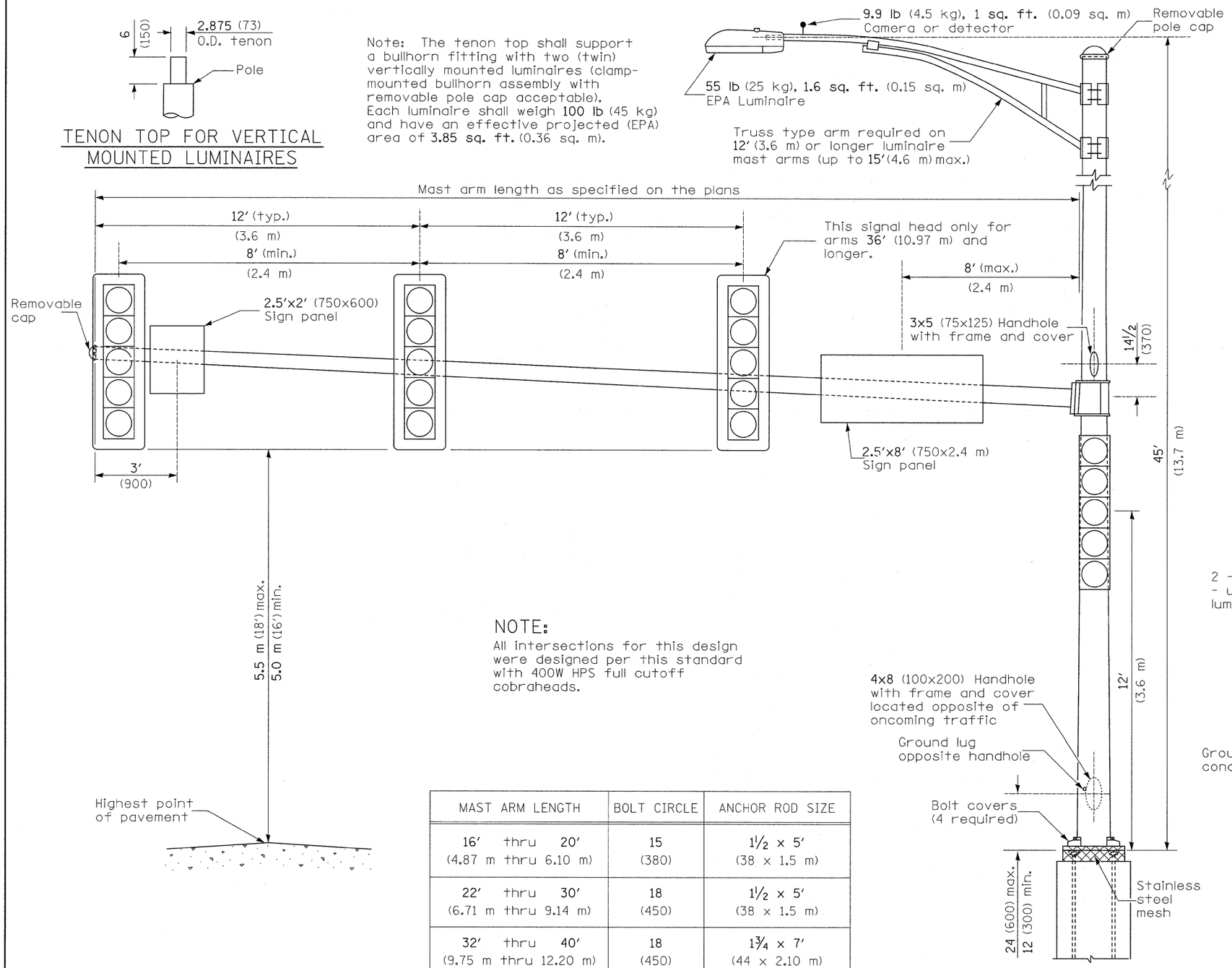

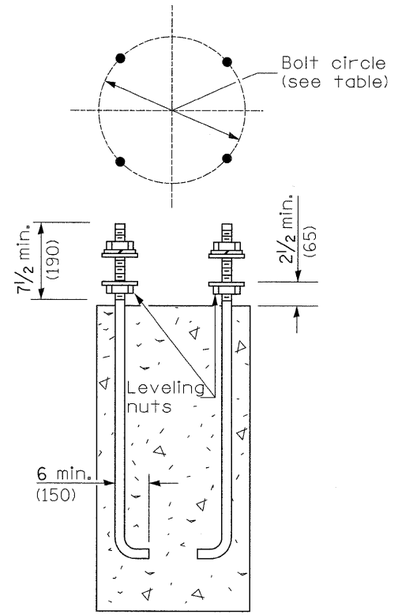

ANCHOR ROD DETAIL

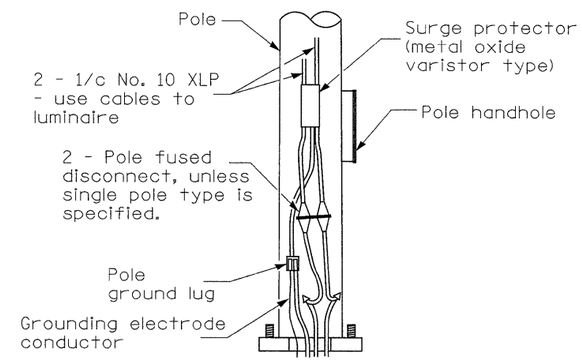

POLE BASE DETAIL

NOTE:
All intersections for this design were designed per this standard with 400W HPS full cutoff cobraheads.

MAST ARM LENGTH	BOLT CIRCLE	ANCHOR ROD SIZE
16' thru 20' (4.87 m thru 6.10 m)	15 (380)	1 1/2 x 5' (38 x 1.5 m)
22' thru 30' (6.71 m thru 9.14 m)	18 (450)	1 1/2 x 5' (38 x 1.5 m)
32' thru 40' (9.75 m thru 12.20 m)	18 (450)	1 3/4 x 7' (44 x 2.10 m)
42' thru 55' (12.80 m thru 16.80 m)	21 (535)	1 3/4 x 7' (44 x 2.10 m)

GENERAL NOTES

Signal heads, sign panels, and other attachments are shown for minimum design loading purposes only. Each signal head shall weigh 80 lb (36 kg) and have a projected area of 14.7 sq. ft. (1.37 sq. m).

FILE NAME = $FILEL$	USER NAME = $USER$	DESIGNED -	REVISED -
		DRAWN -	REVISED -
	PLOT SCALE = $SCALE$	CHECKED -	REVISED -
	PLOT DATE = $DATE$	DATE -	REVISED -

STATE OF ILLINOIS
DEPARTMENT OF TRANSPORTATION

DETAILS:
COMBINATION STEEL MAST ARM ASSEMBLY AND POLE 16' THROUGH 55'

SCALE: N.T.S. | SHEET NO. OF SHEETS | STA. TO STA.

F.A. RTE.	SECTION	COUNTY	TOTAL SHEETS	SHEET NO.
*	(X1-6-2)K-1;(1X-1)R-4	WILLIAMSON	194	135
*	I-57/IL 13 (FAI 57/FAP 331)	CONTRACT NO. 78194		

ILLINOIS FED. AID PROJECT