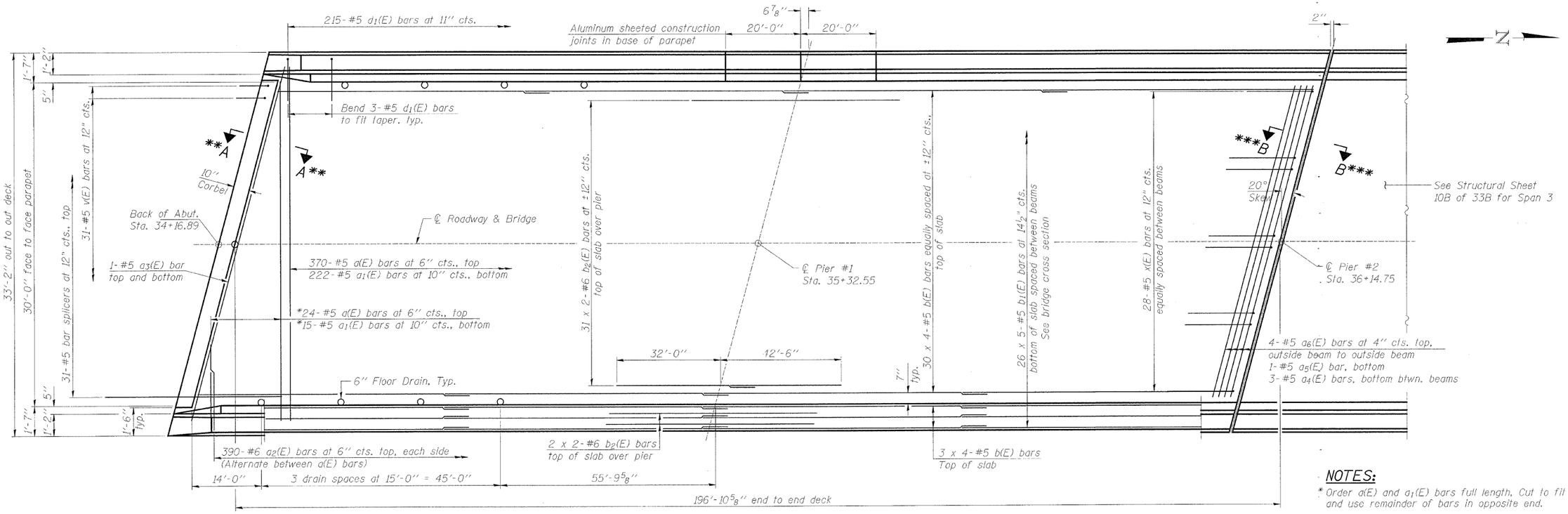

PLAN

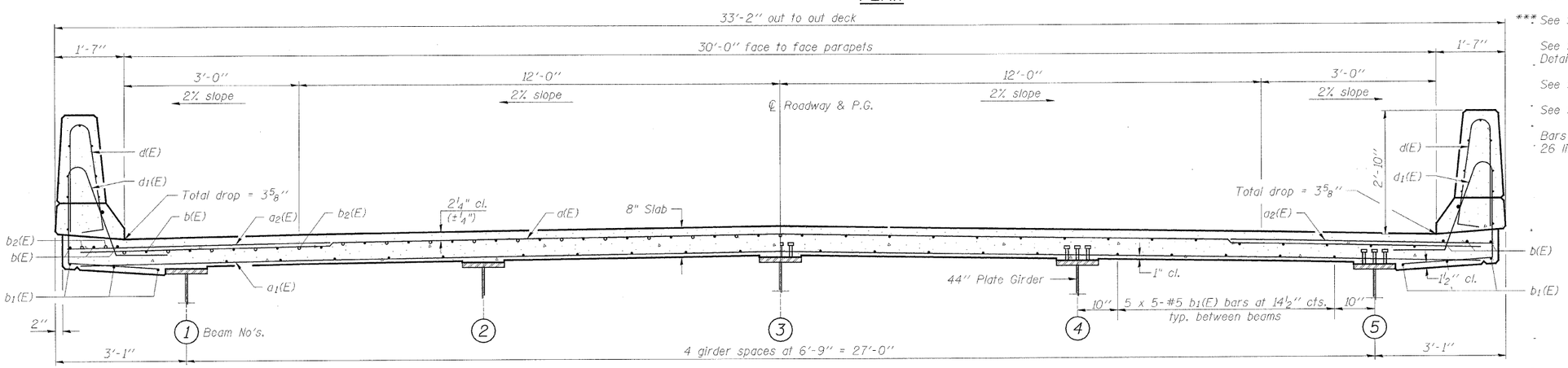

NEAR PIER

NEAR MIDSPAN

CROSS SECTION

(Looking North)

NOTES:

* Order a(E) and a1(E) bars full length. Cut to fit skew and use remainder of bars in opposite end.

** See Structural Sheet 13B of 33B for Sections A-A.

*** See Structural Sheet 11B of 33B for Sections B-B.

See Structural Sheet 11B of 33B for Superstructure Details - Spans 1 & 2.

See Structural Sheet 12B of 33B for Bill of Material.

See Structural Sheet 11B of 33B for parapet reinforcement.

Bars indicated thus 26 x 5- #5 etc. indicates 26 lines of bars with 5 lengths per line.

MIN. LAP	
SIZE	LAP
#4	2'-7"
#5	3'-3"
#6	3'-10"
#7	5'-2"
#8	6'-9"
#9	8'-7"

SUPERSTRUCTURE - SPANS 1 & 2
C.H. 8 OVER IOWA INTERSTATE RAILROAD
& THE HENNEPIN CANAL
STATION 36+00
S.N. 006-3247
WHA #1066D05

STRUCTURAL SHEET NO. 9B OF 33B SHEETS	F.A.S. RTE.	SECTION	COUNTY	TOTAL SHEETS	SHEET NO.
	188	05-00195-00-BR	BUREAU	127	75
			CONTRACT NO. 87380		
	FED. ROAD DIST. NO. 7	ILLINOIS	FED. AID PROJECT BRS-0188(118)		

FILE NAME = s:\Struct\1066D05BureauCounty\Drawings\1066Deck.dgn