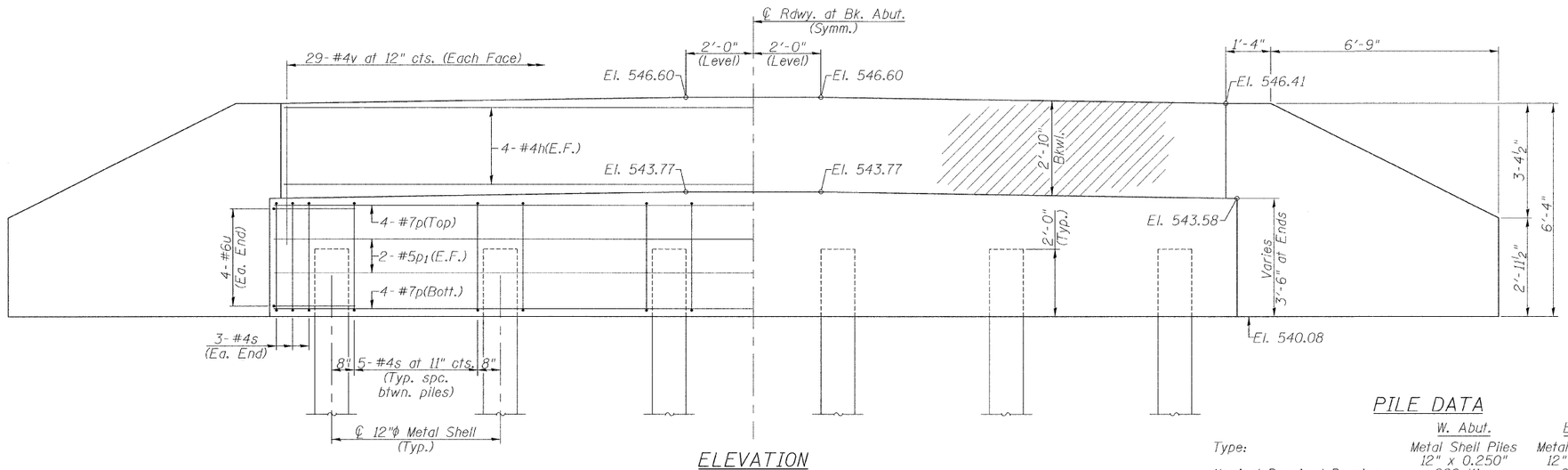

ELEVATION
(W. Abut. Looking West)
(E. Abut. Looking East)

PILE DATA

	W. Abut.	E. Abut.
Type:	Metal Shell Piles 12" x 0.250"	Metal Shell Piles 12" x 0.250"
Nominal Required Bearing:	290 Kips	290 Kips
Factored Resistance Available:	145 Kips	145 Kips
Estimated Pile Length:	80'	83'
Number of Production:	5	5
Number of Test Piles:	1	1

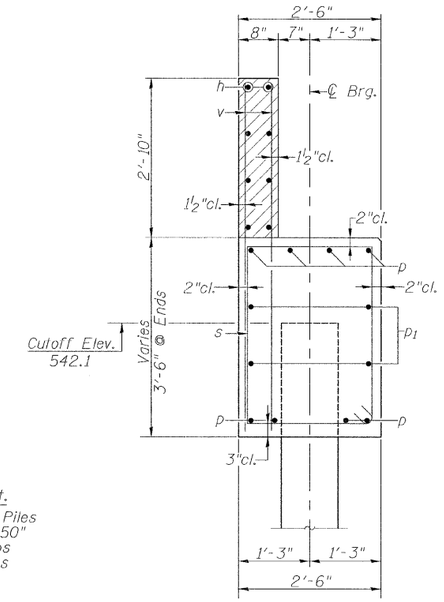

SECTION THRU ABUTMENT

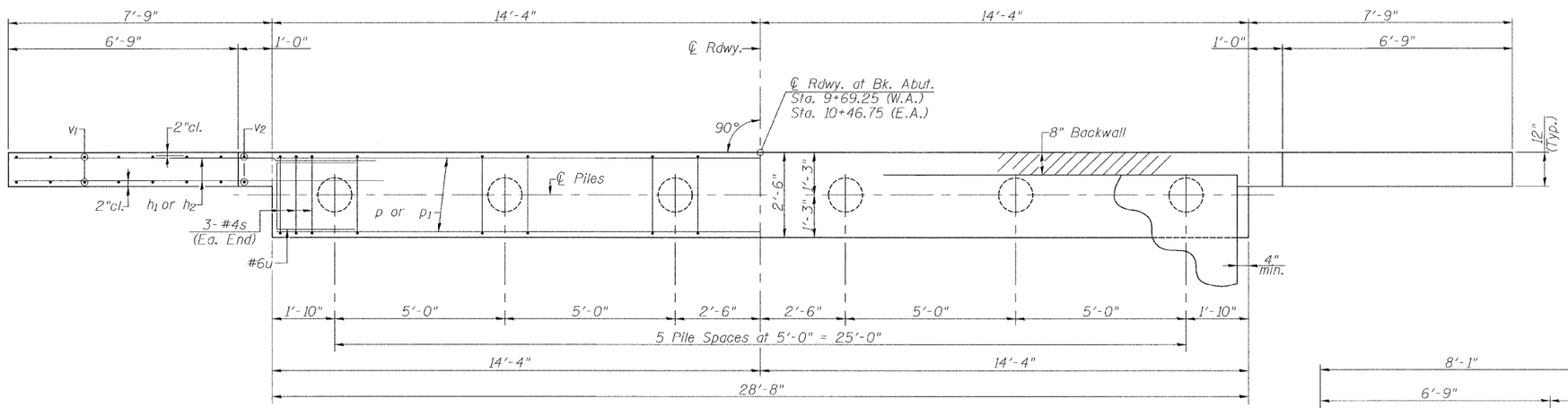

PLAN

NOTES

All exposed edges shall have standard ¾" chamfer.

Space reinforcement in cap to miss beam anchor dowels. Wingwalls and Backwalls may, at the contractor's option, be cast monolithically.

Hatched area and wingwalls shall be poured after deck beams are anchored in place.

The Contractor shall drive test piles to 110% of the nominal required bearing specified in production locations at substructures specified or approved by the Engineer before ordering the remainder of piles.

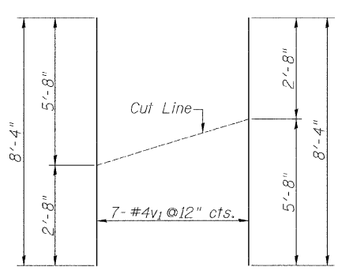

v1 - BAR CUT DIAGRAM

Order v_1 bars full length: Layout in field according to diagram. Cut v_1 bars along cut line. Use remainder of each bar in opposite face.

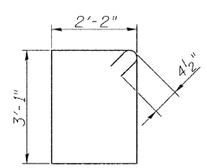

BAR s

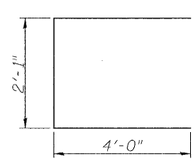

BAR u

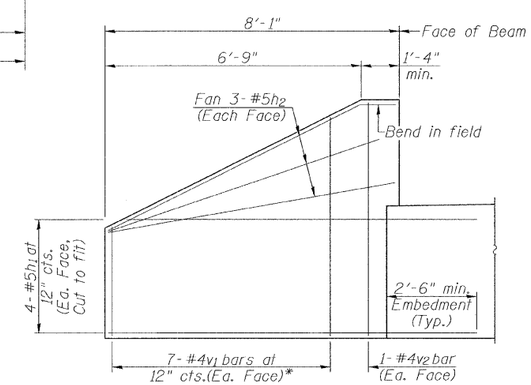

WINGWALL ELEVATION
(Showing Reinforcement)
* See v_1 - bar cut diagram

BILL OF MATERIAL
TWO ABUTMENTS

BAR	NO.	SIZE	LENGTH	SHAPE
h	16	#4	30'-8"	——
h1	32	#5	10'-3"	——
h2	24	#5	7'-9"	——
p	16	#7	28'-4"	——
p1	8	#5	28'-4"	——
s	62	#4	11'-3"	⊐
u	16	#6	10'-1"	⊏
v	116	#4	4'-4"	——
v1	28	#4	8'-4"	——
v2	8	#4	5'-11"	——
Concrete Structures			Cu. Yd.	28.0
Reinforcement Bars			Pound	3260
Structure Excavation			Cu. Yd.	146
Furnishing Metal Shell Piles 12"x0.250"			Foot	815
Driving Piles			Foot	815
Test Pile Metal Shells			Each	2

FILE NAME = $FILEL$	USER NAME = $USER$	DESIGNED -	REVISED -
		DRAWN -	REVISED -
	PLOT SCALE = $SCALE$	CHECKED -	REVISED -
	PLOT DATE = $DATE$	DATE -	REVISED -

Allen Henderson & Associates, Inc.
Civil and Structural Engineers Springfield, IL.
62703 Phone: (217)544-8033 IL. Design Firm
No. 184-001907

ABUTMENTS

SCALE: | SHEET NO. 9 OF 15 SHEETS | STA. TO STA.

T.R. RTE.	SECTION	COUNTY	TOTAL SHEETS	SHEET NO.
43	08-03115-00-BR	MENARD	15	9
		CONTRACT NO. 93530		
FED. ROAD DIST. NO.	ILLINOIS	FED. AID PROJECT		