CONTRACT NO. 98823

F.A.P. RTE.	SECTION	COUNTY	TOTAL SHEETS	SHEET NO.
*	**	***	304	168
STA.		TO STA.		
FED. ROAD DIST. NO. -		ILLINOIS	FED. AID PROJECT	

* FAU 9481, FAS 2887 (IL 37)
** (12,12X),RS-3;12B-1,12B1-1
*** FRANKLIN AND WILLIAMSON

DETAILS OF PERMANENT SURVEY MARKERS

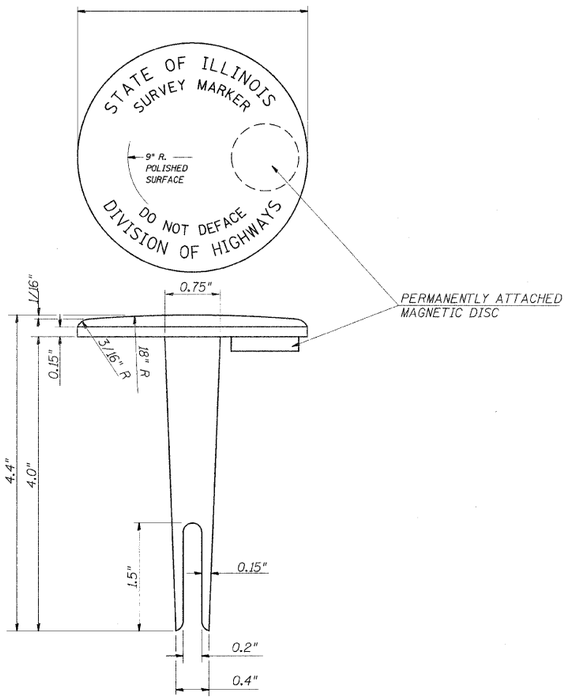

TABLET - BRONZE OR ALUMINUM

PRECAST MARKER

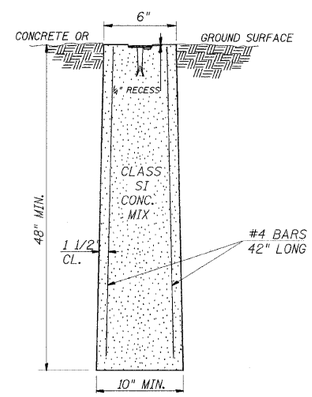

SECTION

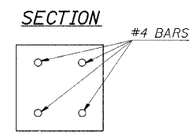

PLAN

NOTES

1. ACTUAL LOCATIONS TO BE DETERMINED BY THE ENGINEER AND A REPRESENTATIVE FROM THE BUREAU OF DESIGN AFTER GRADING IS COMPLETE AND SIGHT DISTANCE CAN BE DETERMINED BETWEEN SURVEY MARKER LOCATIONS.
2. THE MARKERS SHALL BE PRECAST AND SHALL BE INSTALLED IN A WORKMANLIKE MANNER IN ORDER THAT THERE BE NO FUTURE SETTLEMENT OR HORIZONTAL SHIFTING. THE MONUMENT SHALL BE PLACED IN A WAY THAT THE SURVEY POINT WILL FALL WITHIN THE PORTION OF THE PLAQUE PROVIDED FOR THAT PURPOSE. A REPRESENTATIVE FROM THE BUREAU OF PROGRAM DEVELOPMENT WILL LOCATE AND ETCH THE SURVEY POINT ON THE TABLET.
3. THE CONTRACT UNIT PRICE FOR **PERMANENT SURVEY MARKERS** WILL BE PAYMENT IN FULL FOR FURNISHING AND INSTALLING THE MARKER.

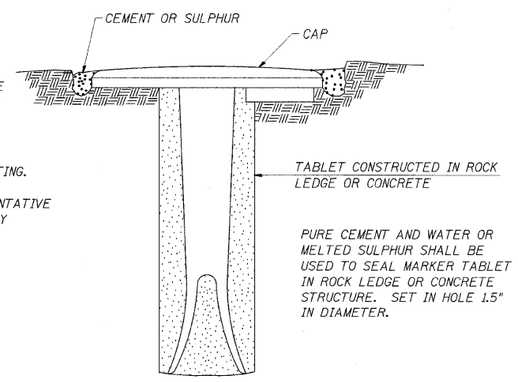

TOTAL QUANTITY FOR PERMANENT SURVEY MARKERS=20

DESIGN NOTE: 2000' SPACING DESIRABLE FOR RURAL
1000' SPACING DESIRABLE FOR URBAN

REVISIONS	
REDRAWN	2-15-89
REVISED	5-11-89
REVISED	8-18-94
REVISED	10-3-94

STD. 9-10

SEEDING & MULCHING

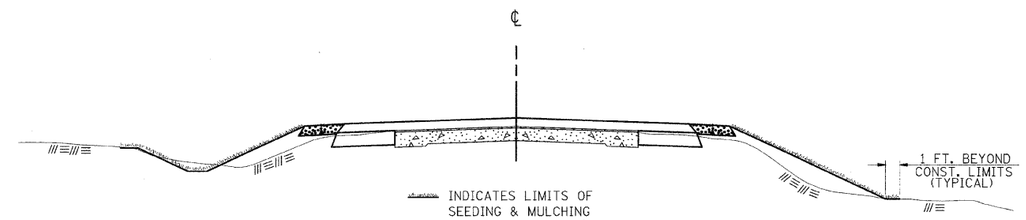

GENERAL NOTES

IN GENERAL, ALL EARTH SURFACES DISTURBED DURING CONSTRUCTION OPERATIONS SHALL BE SEEDED AND MULCHED UPON COMPLETION OF ALL GRADING OPERATIONS.

FERTILIZER NUTRIENTS AND LIMESTONE SHALL BE APPLIED TO ALL SEEDED AREAS.

THE RATES OF APPLICATION OF FERTILIZER, MULCH AND LIMESTONE SHALL BE AS SPECIFIED IN THE SPECIAL PROVISIONS.

SECTIONS 250 AND 251 OF THE STANDARD SPECIFICATIONS SHALL GOVERN THIS WORK EXCEPT AS SPECIFIED HEREIN OR AS NOTED IN THE SPECIAL PROVISIONS.

REVISIONS	
REDRAWN	2-15-89
REVISED	1-15-94
CHECKED	8-3-92

STD. 9-12

REVISIONS	
NAME	DATE

ILLINOIS DEPARTMENT OF TRANSPORTATION

DETAILS:

PERMANENT SURVEY MARKERS; SEEDING AND MULCHING

SCALE: VERT. HORIZ. NO SCALE

DATE

DRAWN BY

CHECKED BY

PLOT DATE = 12/7/2009
FILE NAME = c:\pwworking\PWIDOT\HEADCN\dms43658\d9249203c3.dgn
PLOT SCALE = 50.0000 ' / IN.
USER NAME = headcon