CONTROLLER SEQUENCE

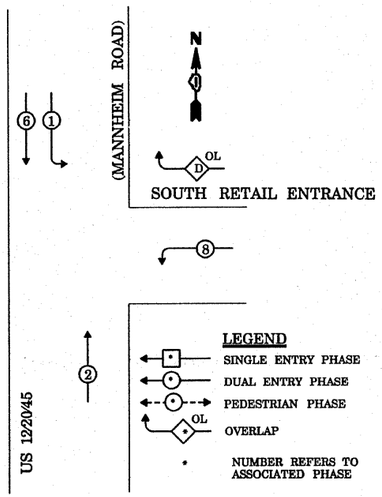

PHASE DESIGNATION DIAGRAM

OVERLAP LETTER		PERMISSIVE PHASE		PROTECTED PHASE
D	=	8	+	1

NOTE:
THE TRAFFIC SIGNAL CONTROLLER EQUIPMENT FOR THIS PROJECT SHALL BE "ECONOLITE" TO MATCH THE EXISTING ADJACENT SYSTEM.

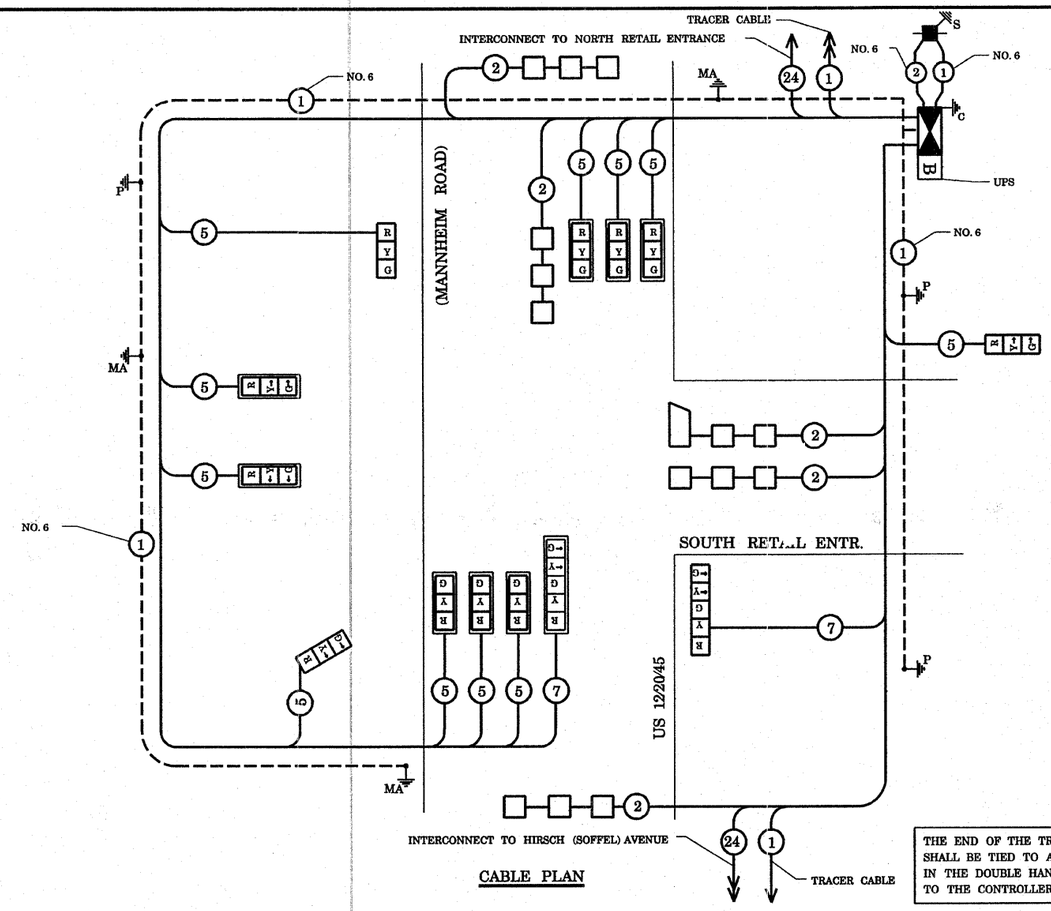

CABLE PLAN

THE END OF THE TRACER CABLE SHALL BE TIED TO A CABLE HOOK IN THE DOUBLE HANDHOLE CLOSEST TO THE CONTROLLER FOUNDATION.

CABLE PLAN LEGEND

PROPOSED	EXISTING	
		8" (200mm) TRAFFIC SIGNAL SECTION
		12" (300mm) TRAFFIC SIGNAL SECTION
		12" (300mm) PEDESTRIAN SIGNAL SECTION
		12"(300mm) PEDESTRIAN SIGNAL SECTION
		CONTROLLER CABINET
		SERVICE INSTALLATON
		TELEPHONE CONNECTION
		MAGNETIC DETECTOR
		PUSHBUTTON DECTECTOR
		VEHICLE DETECTOR, INDUCTION LOOP
		DENOTES NUMBER OF CONDUCTORS. ALL CABLE NO. 14 EXCEPT AS INDICATED. ALL LOOP DETECTOR CABLE TO BE SHIELDED.
"P"	"P"	SIGNAL FACE WITH BACKPLATE. "P" INDICATES PROGRAMMED HEAD
	"E"	RAILROAD CONTROL CABINET
	"E"	ILLUMINATED SIGN, FIBER OPTIC "NO LEFT TURN"
	"E"	ILLUMINATE SIGN, FIBER OPTIC "NO RIGHT TURN"
H/C	H/C	GROUND ROD AT HANDHOLE, DOUBLE HANDHOLE, OR CONTROLLER
P	P	GROUND ROD AT POST OR MAST ARM POLE
S	S	GROUND ROD AT ELECTRIC SERVICE INSTALLATION
1	1	GROUND CABLE IN CONDUIT NO. 6 SOLID COPPER (GREEN)
24	24	FIBER OPTIC CABLE IN CONDUIT NO.62.5/125 2-MM12F & SM12F
		MICROWAVE VEHICLE SENSOR
V	V	VIDEO DETECTOR
C	C	CLOSED CIRCUIT TV
		EMERGENCY VEHICLE LIGHT DETECTOR
		CONFIRMATION BEACON
B	B	UNINTERRUPTABLE POWER SUPPLY

SUMMARY OF QUANTITIES

QUANTITY	UNIT	ITEM
697	SQ FT	PORTLAND CEMENT CONCRETE SIDEWALK, 5 INCH
697	SQ FT	SIDEWALK REMOVAL
0.1	L SUM	TRAFFIC CONTROL AND PROTECTION, STANDARD 701501
0.1	L SUM	TRAFFIC CONTROL AND PROTECTION, STANDARD 701701
0.1	L SUM	TRAFFIC CONTROL AND PROTECTION, STANDARD 701801
15	SQ FT	SIGN PANEL - TYPE 2
101	FOOT	THERMOPLASTIC PAVEMENT MARKING - LINE 24"
202	SQ FT	THERMOPLASTIC PAVEMENT MARKING REMOVAL
571	FOOT	CONDUIT IN TRENCH, 2" DIA., GALVANIZED STEEL
13	FOOT	CONDUIT IN TRENCH, 2*" DIA., GALVANIZED STEEL
10	FOOT	CONDUIT IN TRENCH, 5" DIA., GALVANIZED STEEL
39	FOOT	CONDUIT PUSHED, 2" DIA., GALVANIZED STEEL
101	FOOT	CONDUIT PUSHED, 2*" DIA., GALVANIZED STEEL
100	FOOT	CONDUIT PUSHED, 3" DIA., GALVANIZED STEEL
93	FOOT	CONDUIT PUSHED, 4" DIA., GALVANIZED STEEL
1	EACH	REMOVE EXISTING JUNCTION BOX
5	EACH	HANDHOLE
2	EACH	HEAVY-DUTY HANDHOLE
1	EACH	DOUBLE HANDHOLE
635	FOOT	TRENCH AND BACKFILL FOR ELECTRICAL WORK
1	EACH	FULL-ACTUATED CONTROLLER AND TYPE IV CABINET, SPECIAL
1	EACH	TRANSCEIVER - FIBER OPTIC
1740	FOOT	ELECTRIC CABLE IN CONDUIT, SIGNAL NO. 14 5C
428	FOOT	ELECTRIC CABLE IN CONDUIT, SIGNAL NO. 14 7C
1020	FOOT	ELECTRIC CABLE IN CONDUIT, LEAD-IN, NO. 14 1-PAIR
113	FOOT	ELECTRIC CABLE IN CONDUIT, SERVICE, NO. 6 2C
430	FOOT	ELECTRIC CABLE IN CONDUIT, GROUNDING, NO. 6 1C
2	EACH	TRAFFIC SIGNAL POST, GALVANIZED STEEL 14 FT.
1	EACH	TRAFFIC SIGNAL POST, GALVANIZED STEEL 16 FT.
2	EACH	STEEL MAST ARM ASSEMBLY AND POLE, 34 FT.
1	EACH	STEEL MAST ARM ASSEMBLY AND POLE, 42 FT.
12	FOOT	CONCRETE FOUNDATION, TYPE A
4	FOOT	CONCRETE FOUNDATION, TYPE C
30	FOOT	CONCRETE FOUNDATION, TYPE E 30" DIAMETER
15	FOOT	CONCRETE FOUNDATION, TYPE E 36" DIAMETER
1	EACH	DRILL EXISTING HANDHOLE
9	EACH	TRAFFIC SIGNAL BACKPLATE, LOUVERED, ALUMINUM
5	EACH	INDUCTIVE LOOP DETECTOR
516	FOOT	DETECTOR LOOP, TYPE I
1	EACH	TEMPORARY TRAFFIC SIGNAL INSTALLATION
1	EACH	REMOVE EXISTING TRAFFIC SIGNAL EQUIPMENT
6	EACH	REMOVE EXISTING HANDHOLE
6	EACH	REMOVE EXISTING CONCRETE FOUNDATION
8	EACH	SIGNAL HEAD, L.E.D., 1-FACE, 3-SECTION, MAST ARM MOUNTED
3	EACH	SIGNAL HEAD, L.E.D., 1-FACE, 3-SECTION, BRACKET MOUNTED
1	EACH	SIGNAL HEAD, L.E.D., 1-FACE, 5-SECTION, BRACKET MOUNTED
1	EACH	SIGNAL HEAD, L.E.D., 1-FACE, 5-SECTION, MAST ARM MOUNTED
1	EACH	TEMPORARY TRAFFIC SIGNAL TIMINGS
1	EACH	SERVICE INSTALLATION, POLE MOUNT
1	EACH	UNINTERRUPTIBLE POWER SUPPLY

TYPE	NO. LAMPS	X WATTAGE INCAND.	WATTAGE LED	X % OPERATION	TOTAL WATTAGE
SIGNAL (RED)	13		17	0.50	110.50
(YELLOW)	13		25	0.25	81.25
(GREEN)	13		15	0.25	48.75
ARROW	4		12	0.10	4.80
PED. SIGNAL			25	1.00	-
CONTROLLER	1		100	1.00	100.00
ILLUM. SIGN				0.05	-
FLASHER				0.05	-
				TOTAL=	345.30

ENERGY COSTS TO: VILLAGE OF MELROSE PARK

ENERGY SUPPLY CONTACT: MR. MIKE BELL
PHONE: (708)410-5314
COMPANY: COMMONWEALTH EDISON

FILE NAME = c:\projects\traffic\t070027\us12.20.45.dgn	USER NAME = kanthaphixaybc	DESIGNED - N.B.	REVISED -
		DRAWN - N.B.	REVISED -
	PLOT SCALE = 40.0000 ' / IN.	CHECKED - D.B.	REVISED -
	PLOT DATE = 10/10/2008	DATE - 09/04/2008	REVISED -

STATE OF ILLINOIS
DEPARTMENT OF TRANSPORTATION

PROPOSED CABLE PLAN
US 12/20/45(MANNHEIM ROAD) AT SOUTH RETAIL ENTRANCE

SCALE: NTS | SHEET NO. OF SHEETS | STA. TO STA.

F.A.P. RTE.	SECTION	COUNTY	TOTAL SHEETS	SHEET NO.
330	2008-006 TS	COOK	104	42
		CONTRACT NO. 60E31		

FED. ROAD DIST. NO. | ILLINOIS | FED. AID PROJECT

...\traffic\t070027\us12_20_45.dgn 10/10/2008 2:18:50 PM User=kanthaphixaybc