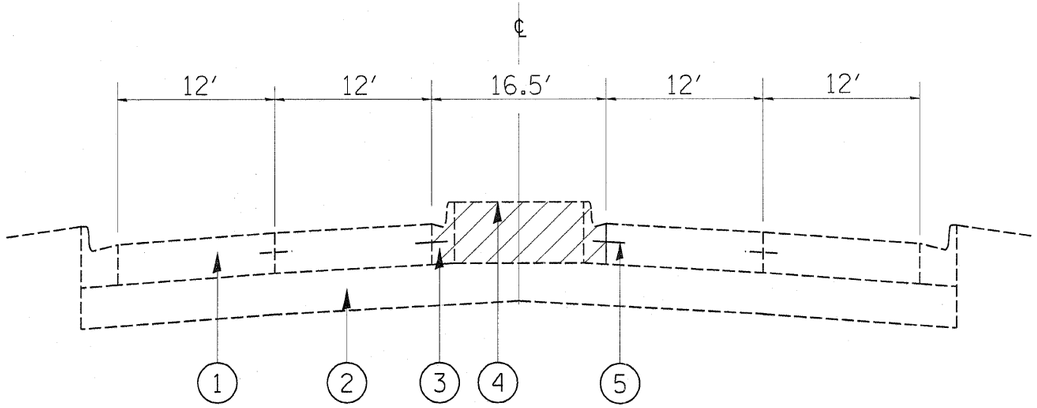

GRASS MEDIAN PORTION

EXISTING TYPICAL CROSS SECTION

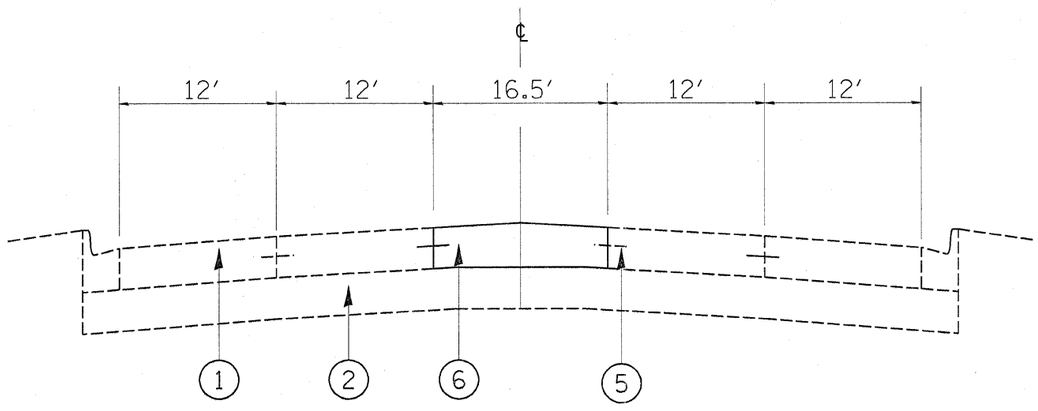

GRASS MEDIAN PORTION

PROPOSED TYPICAL CROSS SECTION

LEGENDS

1. EXISTING PCC PAVEMENT (JOINTED), 10″
2. EXISTING AGGREGATE SUBGREADE, 12″
3. EXISTING COMB. CONC. CURB & GUTTER, B.6-18
4. EXISTING SODDING & TOP SOIL
5. EXISTING NO. 20 EPOXY-COATED DEFORMED TIE BARS 24″ C-C AND 24″ LONG, DRILLED & GROUTED (COST INCL. IN PROPOSED PCC PAVT. 10″ (JOINTED)
6. PROPOSED PC CONCRETE PAVEMENT, 10″

PROPOSED MEDIAN REMOVAL

SHEET 1 OF 4

FILE NAME = c:\pw_work\PWIDOT\BYUNSH\d0101576\design_ea.dgn	USER NAME = byunsh	DESIGNED -	REVISED -	STATE OF ILLINOIS DEPARTMENT OF TRANSPORTATION	TYPICAL SECTIONS MANNHEIM AVENUE NORTH OF ROOSEVELT ROAD MEDIAN UNDER CHICAGO CENTRAL & PACIFIC RAILROAD BRIDGE	F.A.P RTE.	SECTION	COUNTY	TOTAL SHEETS	SHEET NO.
		DRAWN -	REVISED -			330	2008-006 TS	COOK	104	104A.
	PLOT SCALE = 20.0000 ′ / IN.	CHECKED -	REVISED -					CONTRACT NO. 60E31		
	PLOT DATE = 11/20/2008	DATE -	REVISED -		SCALE: 1″=10′ SHEET NO. OF SHEETS STA. TO STA.	FED. ROAD DIST. NO.	ILLINOIS	FED. AID PROJECT		