F.A. ROUTE NO.	SECTION	COUNTY	TOTAL SHEETS	SHEET NO.
866	*	LAKE	554	265
FED. ROAD DIST. NO.		ILLINOIS	FED. AID PROJECT	

*(L-2[W,R];6,6A & 6 EXT) WRS-1

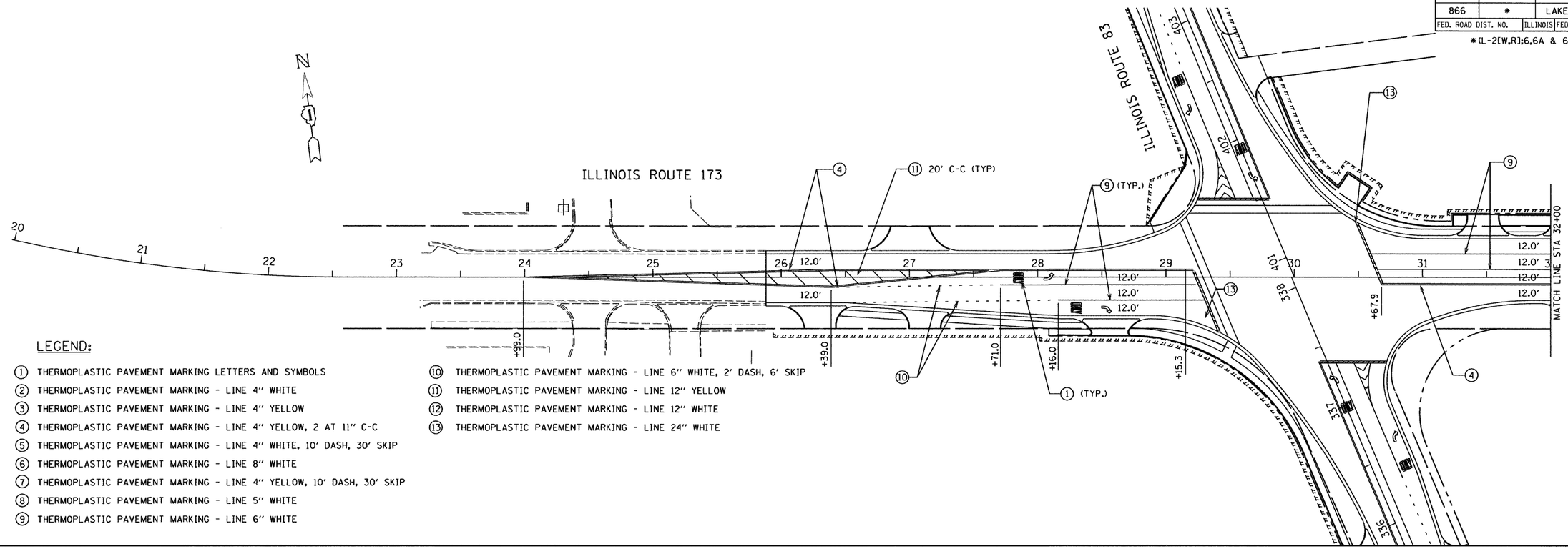

LEGEND:

1. THERMOPLASTIC PAVEMENT MARKING LETTERS AND SYMBOLS
2. THERMOPLASTIC PAVEMENT MARKING - LINE 4" WHITE
3. THERMOPLASTIC PAVEMENT MARKING - LINE 4" YELLOW
4. THERMOPLASTIC PAVEMENT MARKING - LINE 4" YELLOW, 2 AT 11" C-C
5. THERMOPLASTIC PAVEMENT MARKING - LINE 4" WHITE, 10' DASH, 30' SKIP
6. THERMOPLASTIC PAVEMENT MARKING - LINE 8" WHITE
7. THERMOPLASTIC PAVEMENT MARKING - LINE 4" YELLOW, 10' DASH, 30' SKIP
8. THERMOPLASTIC PAVEMENT MARKING - LINE 5" WHITE
9. THERMOPLASTIC PAVEMENT MARKING - LINE 6" WHITE
10. THERMOPLASTIC PAVEMENT MARKING - LINE 6" WHITE, 2' DASH, 6' SKIP
11. THERMOPLASTIC PAVEMENT MARKING - LINE 12" YELLOW
12. THERMOPLASTIC PAVEMENT MARKING - LINE 12" WHITE
13. THERMOPLASTIC PAVEMENT MARKING - LINE 24" WHITE

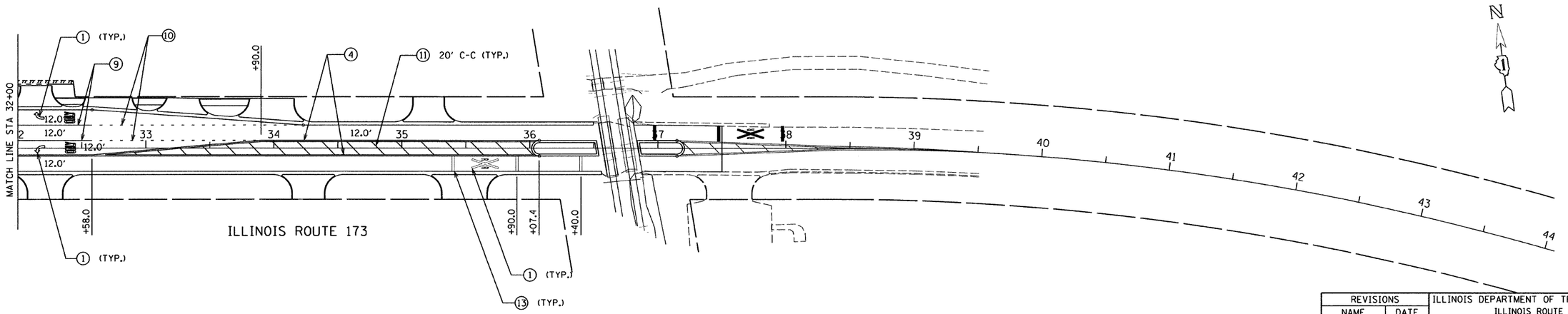

40 0 40 80 120 160 200
SCALE IN FEET
1"=40'

REVISIONS	
NAME	DATE

ILLINOIS DEPARTMENT OF TRANSPORTATION
ILLINOIS ROUTE 83
FROM THE WISCONSIN STATE LINE TO
NORTH OF PETITE LAKE ROAD

PAVEMENT MARKING

ILLINOIS ROUTE 173

DRAWN BY: GP
DATE: 1/30/09 CHECKED BY: MW

GRAEF, ANHALT, SCHLOEMER & ASSOCIATES, INC.
CHICAGO, ILLINOIS

G:\20004024_N\ms\planset\pmark14.dgn
1/26/2009 1:41:39 PM