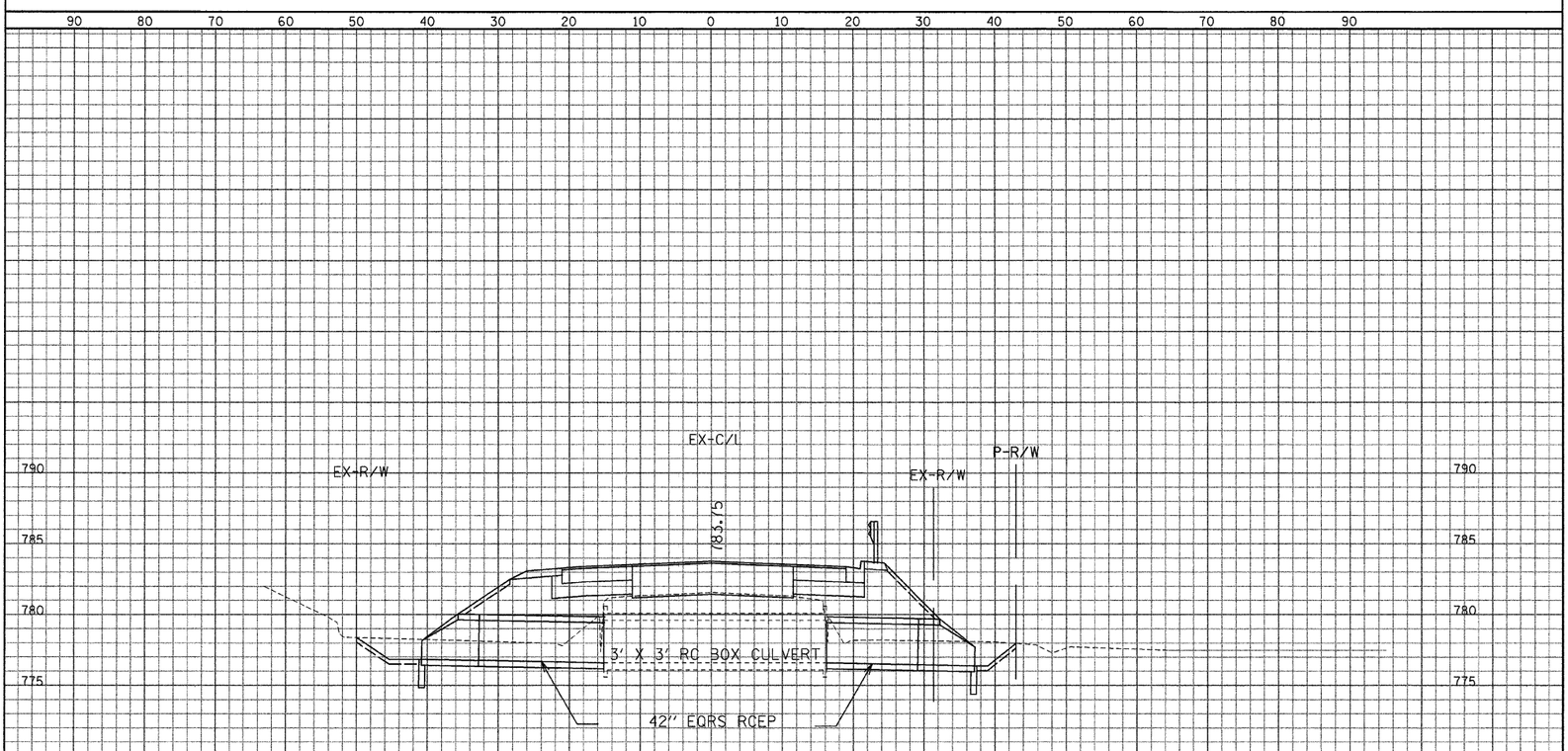

263+79.70

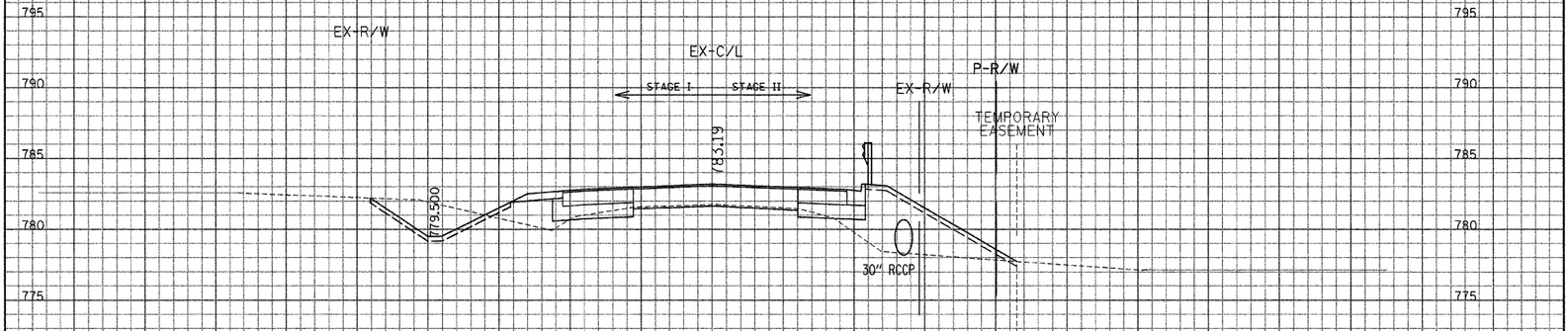

STAGE_I

TOPSOIL_EXC.(SQ._FT)	18.6
UNSUITABLE_EXC.(SQ._FT)	0.0
EARTH_EXC.(SQ._FT)	21.8
EMBANKMENT(SQ._FT)	19.6
POROUS_GRANULAR_EMB(SQ._FT)	0.0

STAGE_II

TOPSOIL_EXC.(SQ._FT)	15.5
UNSUITABLE_EXC.(SQ._FT)	0.0
EARTH_EXC.(SQ._FT)	2.4
EMBANKMENT(SQ._FT)	66.1
POROUS_GRANULAR_EMB(SQ._FT)	0.0

263+00.00

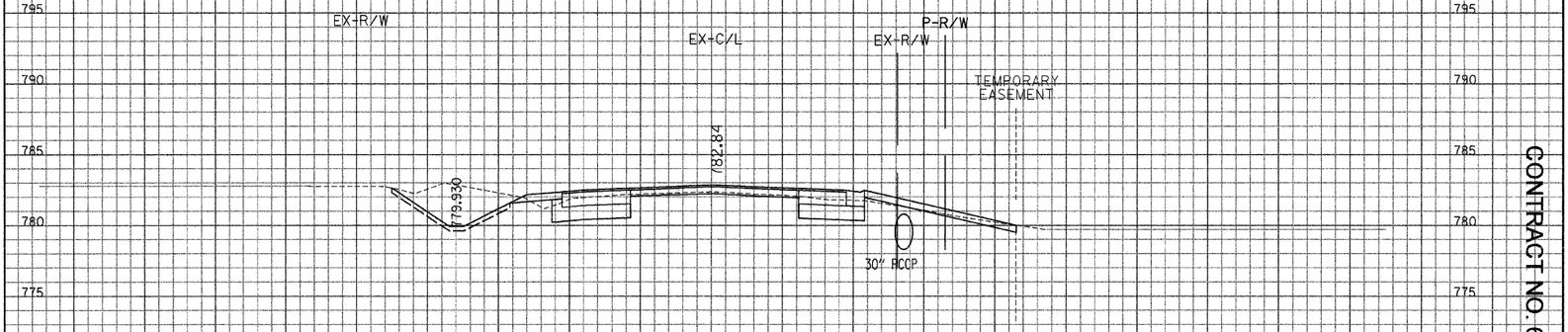

262+14.00

CONTRACT NO. 62700

F.A.P. RTE.	SECTION	COUNTY	TOTAL SHEETS	SHEET NO.
866	*	LAKE	554	376

STA. TO STA.

FED. ROAD DIST. NO. ILLINOIS FED. AID PROJECT

* (L-2(W,R):6,6A & 6 EXT) WRS-1

GRAEF, ANHALT, SCHLOEMER & ASSOCIATES, INC.
ENGINEERS & SCIENTISTS
8501 W. Higgins Road; Suite 280
Chicago, Illinois 60631
(773) 399-0112

ILLINOIS DEPARTMENT OF TRANSPORTATION

F. A. P. ROUTE 866 (IL ROUTE 83)

STA. 262+14 TO STA. 263+79.70

SCALE: HORIZ. 1" = 10'

VERT. 1" = 5'

FILE: G:\20004024_N\geo\Area_C\XSHT_C.dgn
DATE: 06-Jan-04 09:22