NOTE:
CONTRACTOR SHALL VERIFY
BUILDING FFE PRIOR TO RAMP
SHOP DRAWING SUBMITTAL

F.A.U. RTE.	SECTION	COUNTY	TOTAL SHEETS	SHEET NO.
1472& 3569	06-00073-00-LS	COOK	24	22
STA.		TO STA.		
FED. ROAD DIST. NO.	ILLINOIS	FED. AID PROJECT		

CONTRACT NO. 63133

A-2.0

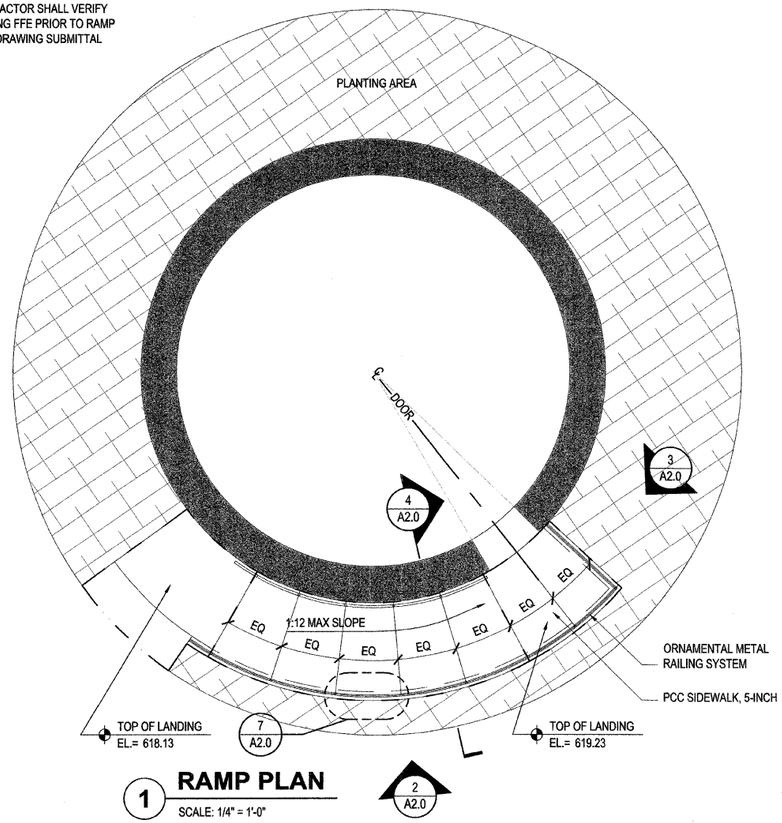

1 **RAMP PLAN**
SCALE: 1/4" = 1'-0"

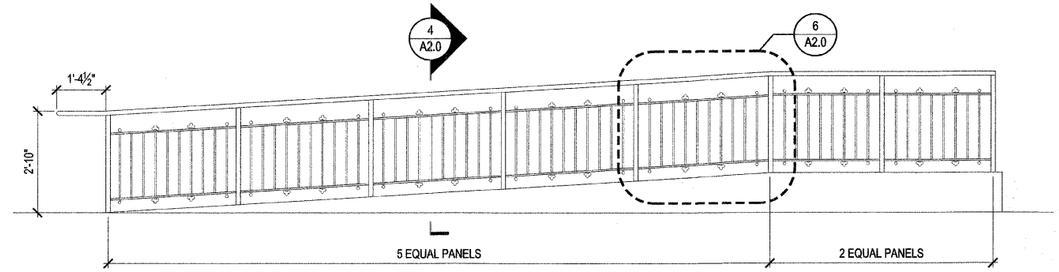

2 **DEVELOPED RAMP ELEVATION**
SCALE: 1/2" = 1'-0"

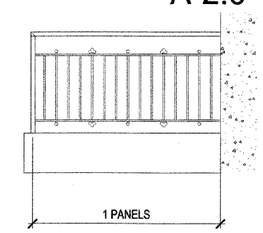

3 **DEVELOPED RAMP ELEVATION**
SCALE: 1/2" = 1'-0"

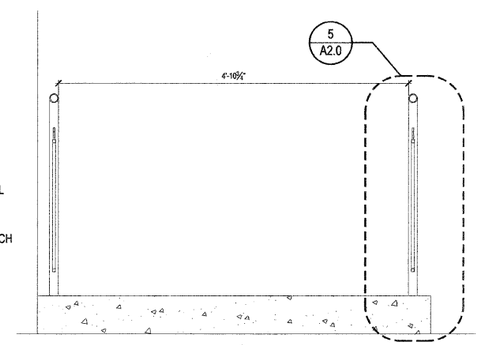

4 **RAMP SECTION**
SCALE: 1" = 1'-0"

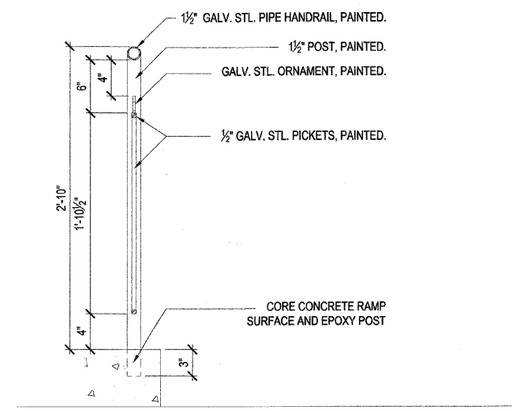

5 **RAMP DETAIL**
SCALE: 1-1/2" = 1'-0"

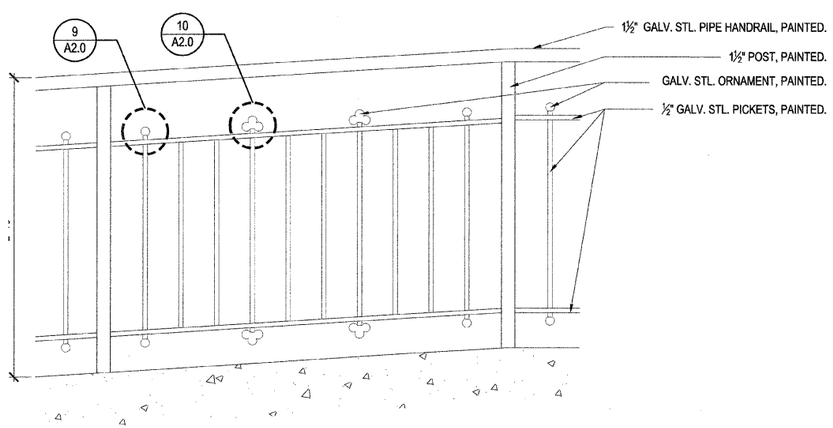

6 **ENLARGED ELEVATION**
SCALE: 1-1/2" = 1'-0"

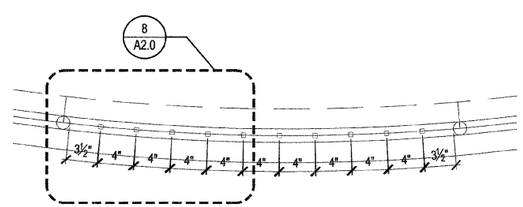

7 **ENLARGED PLAN**
SCALE: 1-1/2" = 1'-0"

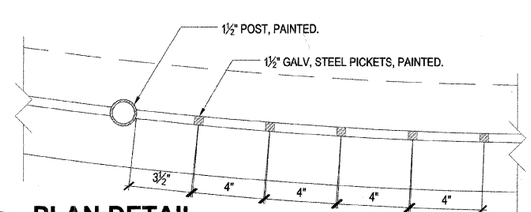

8 **PLAN DETAIL**
SCALE: 3" = 1'-0"

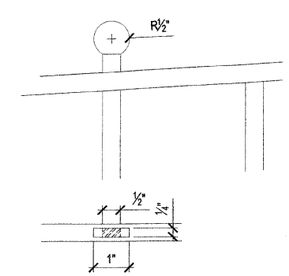

9 **CIRCLE ORNAMENT**
SCALE: 6" = 1'-0"

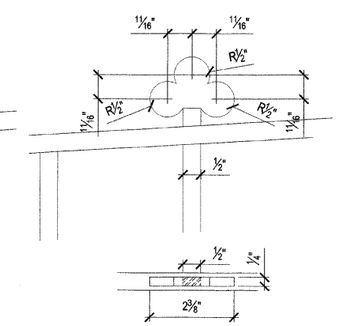

10 **CLOVER ORNAMENT**
SCALE: 6" = 1'-0"

DLK
Civic Design
The Fine Arts Building
410 South Michigan Avenue
Chicago, Illinois 60605
Tel. 312.322.0911
Fax 312.322.5324
www.dlkinc.com

REVISIONS	
NAME	DATE

ILLINOIS DEPARTMENT OF TRANSPORTATION
FAU ROUTES 1472 & 3569
VILLAGE OF RIVERSIDE
RAILWAY/WATER TOWER CAMPUS RESTORATION PROJECT

ARCHITECTURAL RAMP DRAWINGS

SCALE: VARIES
DATE: 12-05-2008
DRAWN BY: EB
CHECKED BY: JE