F.A.U. ROUTE NO.	SECTION	COUNTY	TOTAL SHEETS	SHEET NO.
4011	07-00072-00-PV	McHENRY	80	73

ILLINOIS PROJECT
CONTRACT NO. 63137

NOTE:
SERVICE PIPE SHALL BE OF THE TYPE SPECIFIED AND/OR ALLOWED BY THE MUNICIPALITY. IF DISSIMILAR FROM MAIN LINE SEWER, A NON-SHEAR COUPLING ADAPTER FITTING BY FERNCO INC. SHALL BE USED. IF MANUFACTURED ADAPTER IS NOT AVAILABLE, METHOD AND MANNER OF CONNECTION OR JOINTING SHALL BE APPROVED BY THE ENGINEER IN WRITING PRIOR TO CONSTRUCTION.

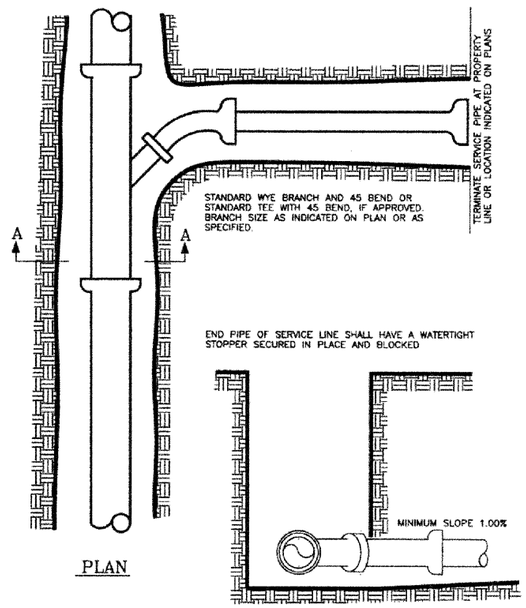

PLAN

SECTION A-A

MINIMUM 4" APPROVED, COMPACTED GRANULAR BEDDING AND BACKFILL 12" ABOVE SERVICE LINE

SANITARY SERVICE

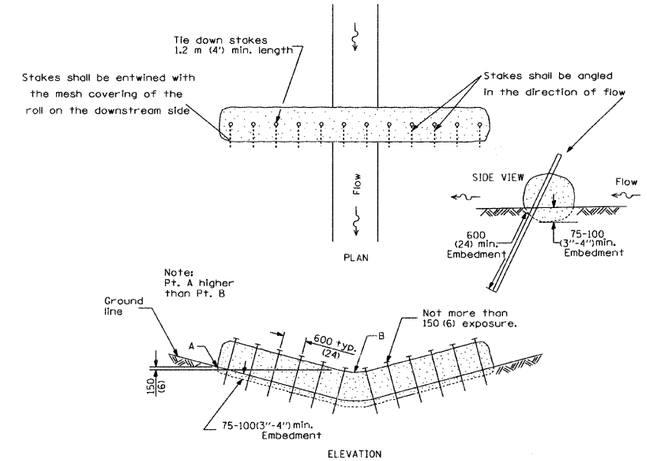

ROLLED EXCELSIOR FOR DITCH CHECK

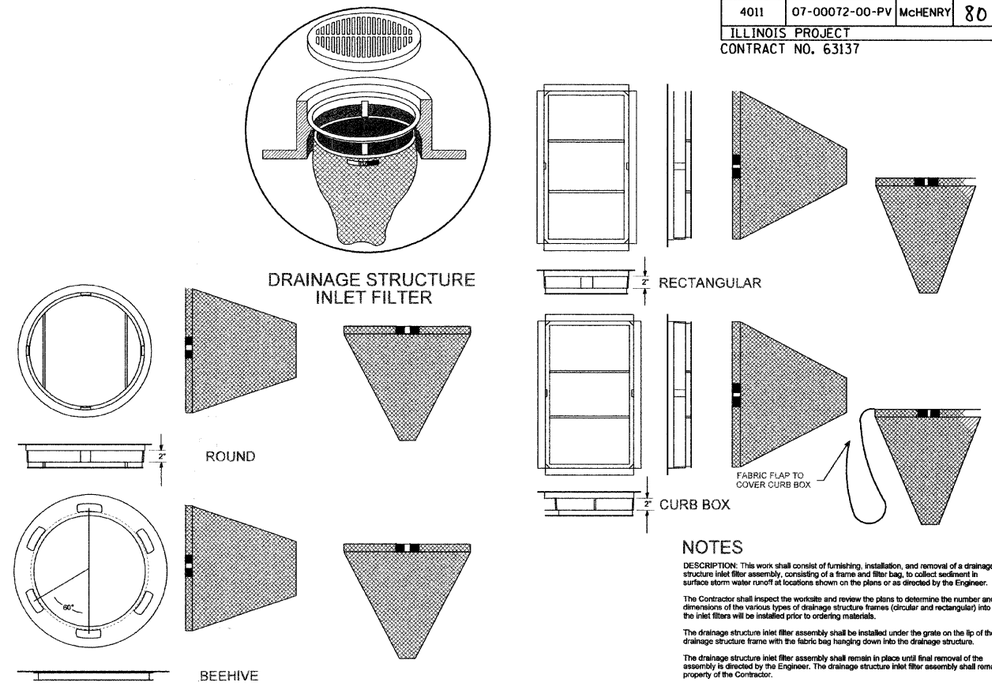

NOTES

DESCRIPTION: This work shall consist of furnishing, installation, and removal of a drainage structure inlet filter assembly, consisting of a frame and filter bag, to collect sediment in surface storm water runoff at locations shown on the plans or as directed by the Engineer.

The Contractor shall inspect the worksite and review the plans to determine the number and dimensions of the various types of drainage structure frames (circular and rectangular) into which the inlet filters will be installed prior to ordering materials.

The drainage structure inlet filter assembly shall be installed under the grate on the lip of the drainage structure frame with the fabric bag hanging down into the drainage structure.

The drainage structure inlet filter assembly shall remain in place until final removal of the assembly is directed by the Engineer. The drainage structure inlet filter assembly shall remain the property of the Contractor.

Final removal of the assembly shall include the disposal of debris or silt that has accumulated in the filter bag at the time of final removal. Periodic cleaning of the filter is paid for separately.

MATERIALS: The drainage structure inlet shall be the (INLET AND PIPE PROTECTION), as furnished by Marathon Materials, Inc. 25523 W. Shultz St., Plainfield, IL 60544, (800) 983-9463, or approved equal. A detailed drawing in the plans depicts the drainage structure inlet filter assembly.

The drainage structure inlet filter assembly shall consist of a steel frame with a replaceable geotextile fabric bag attached with a steel band with locking cap that is suspended from the frame. A clean used bag and used steel frame in good condition, meeting the approval of the Engineer, may be substituted for new materials.

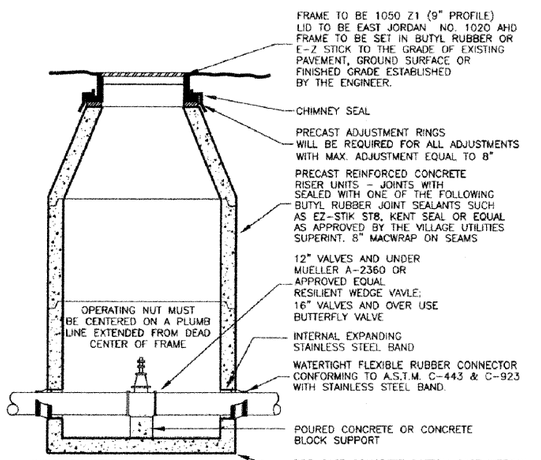

NOTE:
ALL VALVES SHALL BE ENCLOSED IN A VAULT UNLESS OTHERWISE SPECIFIED AT MAX. OF 1000 FEET INTERVALS

STRUCTURE TO BE BITUMINOUS COATED

VALVE VAULT

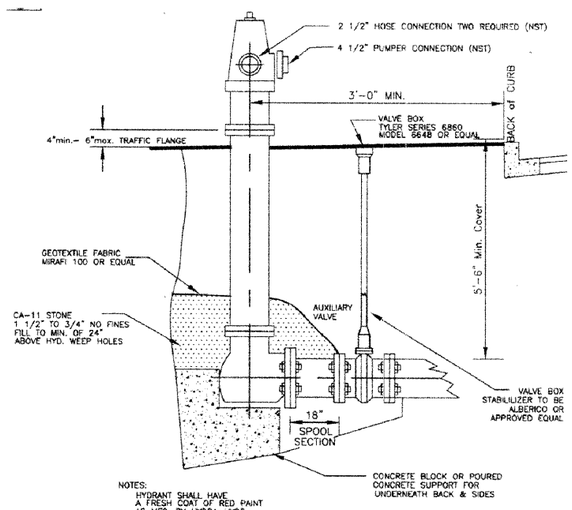

NOTES:
HYDRANT SHALL HAVE A FRESH COAT OF RED PAINT AS MFG. BY HYDRA-HYDE
CONCRETE SUPPORT AND/OR THRUST BLOCKING SHALL NOT BLOCK OR OBSTRUCT HYDRANT WEEP HOLES.
HYDRANT SHALL BE WATEROUS PACER WB67-250 WITH TRAFFIC FLANGE
ALL JOINTS SHALL BE RESTRAINED JOINTS MEG-A-LUG TYPE

HYDRANT WITH AUXILIARY VALVE AND VALVE BOX

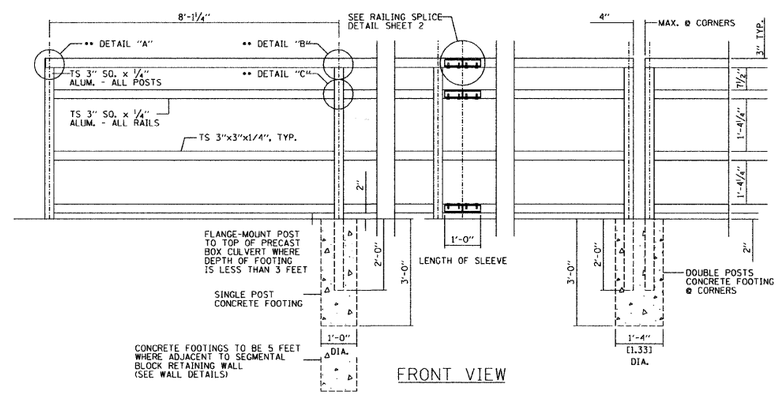

FRONT VIEW

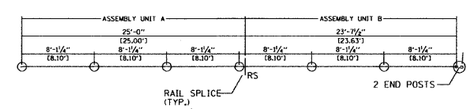

PLAN VIEW

BICYCLE RAILING DETAIL

DESIGN NOTES:

1. RAILING SHALL BE ACCORDING TO SECTION 509 OF THE IDOT STANDARD SPECIFICATIONS, EXCEPT AS NOTED AND WILL BE PAID FOR AT THE CONTRACT UNIT PRICE PER FOOT FOR BICYCLE RAILING.
2. ALL TUBING WILL BE ALUMINUM ALLOY 6063-T52
3. ALL DIMENSIONS ARE IN FEET AND INCHES EXCEPT AS NOTED.
4. ALL POSTS, RAILING SHALL BE PAINTED IN ACCORDANCE WITH SECTION 506 OF THE IDOT STANDARD SPECIFCATIONS.
5. ALL RAIL WILL BE SANDBLASTED PER SSPC-SP6 FOLLOWED BY SHOP APPLIED PRIMER AND TOP COAT AS FOLLOWS:
   3.00 MILS DFT TNEMEC 66-HI BUILD EPOXOLINE EPOXY INTERMIN COAT,
   2.00 MILS DFT TNEMEC 73-COLOR ALIPHATIC ACRYLIC POLYURETHANE TOP COAT - BLACK.
6. ALL BOLTS, NUTS AND WASHERS SHALL BE STAINLESS STEEL.
7. SHOP DRAWINGS BASED ON INDIVIDUAL PROJECT PLAN VIEW LOCATIONS MUST BE SUBMITTED TO THE RESIDENT ENGINEER FOR APPROVAL.
8. DOUBLE POSTS ø CORNERS ARE INTENDED TO CHANGE HORIZONTA ALIGNMENT ONLY. DO NOT USE THESE TO CHANGE VERTICAL ALIGNMENT.

REVISIONS	
NAME	DATE

HANSON ROAD IMPROVEMENTS
EDGEWOOD TO HUNTINGTON

CONSTRUCTION DETAILS

DATE: 03-27-09

DRAWN BY: AJR
CHECKED BY: MAY

GRAEF, ANHALT, SCHLOEMER & ASSOCIATES, INC.
CHICAGO, ILLINOIS

FILE: H:\Jobs2007\20073002-40\CAD\Site\dgn\00\Detail01.dgn
DATE: 30-Jan-09 13:50