F.A.P. RTE.	SECTION	COUNTY	TOTAL SHEETS	SHEET NO.
505	111RS-4, 111BR-1, Ya-15d-RS-1,& (W-15d)T-1	STEPHENSON & WINNEBAGO	335	40
STA.		TO STA.		
FED. ROAD DIST. NO. 2	ILLINOIS	FED. AID PROJECT		

CONTRACT NO. 64970

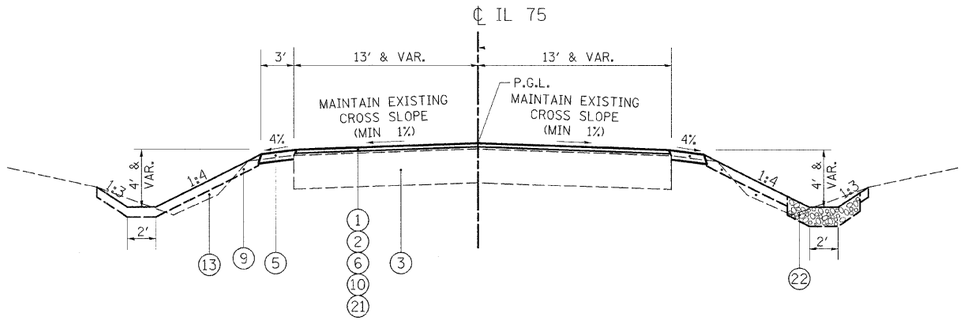

TYPICAL SECTION - RESURFACING

STA 10711+68 TO 10715+00

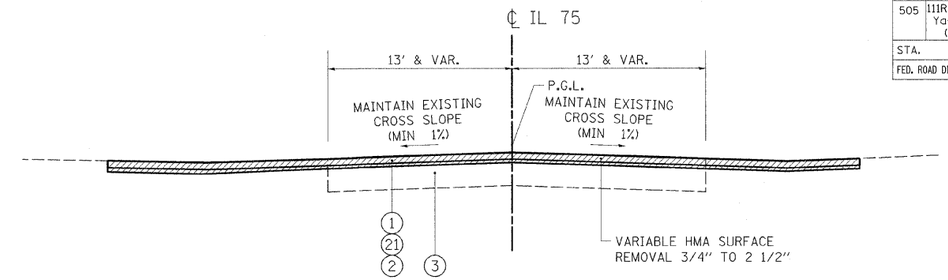

TYPICAL SECTION - MILLING AND RESURFACING

STA 10874+20 TO 10877+30
STA 10926+88 TO 10930+73

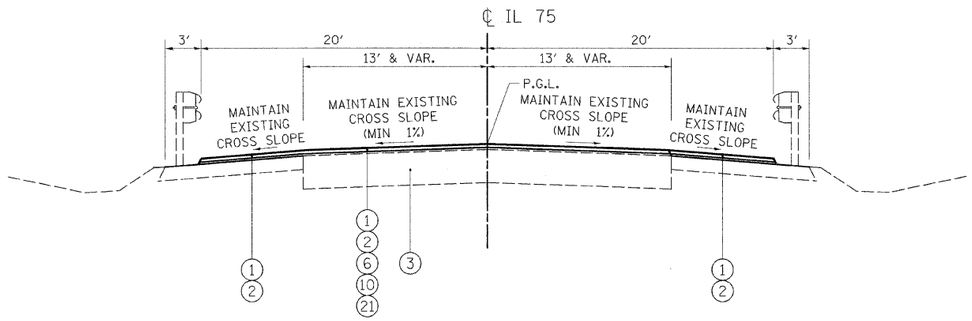

TYPICAL SECTION - RESURFACING, EXISTING GUARDRAIL

STA 10733+94 TO 10739+00

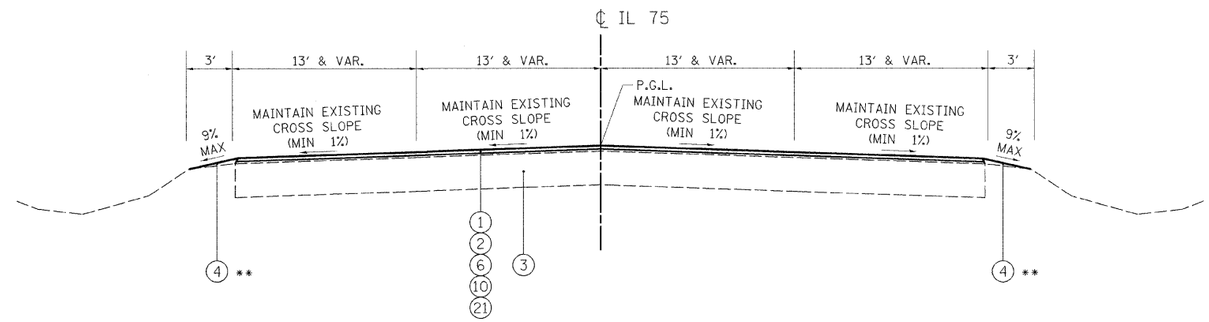

TYPICAL SECTION - RESURFACING FOUR LANES

STA 10877+30 TO 10884+30
STA 10920+00 TO 10926+88

** SEE TURF SHOULDER DETAIL FOR ADDITIONAL GRADING INFORMATION

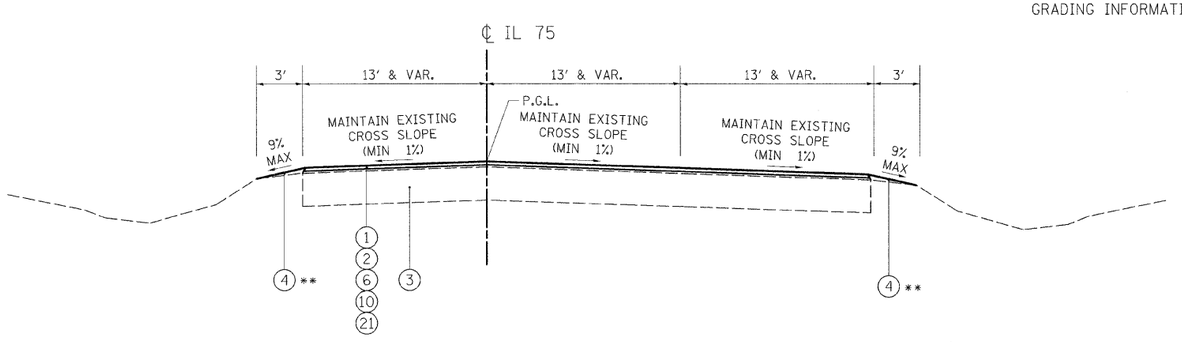

TYPICAL SECTION - RESURFACING THREE LANES

STA 10864+50 TO 10874+20
STA 10930+73 TO 10936+13

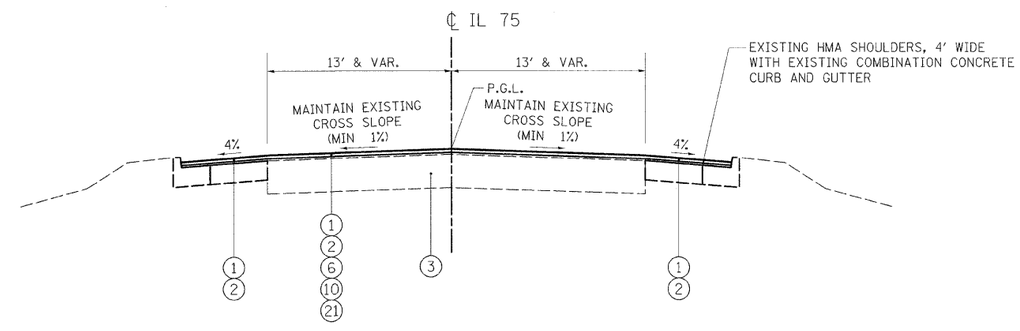

TYPICAL SECTION - RESURFACING, EXISTING CURB AND GUTTER

STA 10912+00 TO 10918+00

LEGEND

1. 1 1/2", HOT-MIX ASPHALT SURFACE COURSE, MIX "D", N50
2. 1", LEVELING BINDER (MACHINE METHOD), N50
3. EXISTING +/-7" PCC PAVEMENT WITH +/-7" HOT-MIX ASPHALT OVERLAY
4. AGGREGATE WEDGE SHOULDERS, TYPE B
5. AGGREGATE SHOULDERS, TYPE A, 6"
6. HOT-MIX ASPHALT SURFACE REMOVAL, 3/4"
7. PAVEMENT REMOVAL, EXISTING +/-7" PCC PAVEMENT WITH +/-7" HOT-MIX ASPHALT OVERLAY (REPLACE WITH 8)
8. PORTLAND CEMENT CONCRETE BASE COURSE, 9 1/4"
9. TOPSOIL, 6"
10. 3/4", LEVELING BINDER (MACHINE METHOD), N50
11. 2", HOT-MIX ASPHALT SURFACE COURSE, MIX "C", N50
12. HOT-MIX ASPHALT SHOULDERS, 6"
13. SUITABLE EMBANKMENT
14. HOT-MIX ASPHALT PAVEMENT (FULL-DEPTH), 12"
15. COMBINATION CONCRETE GUTTER & GUTTER, TYPE B-6.24
16. AGGREGATE SHOULDERS, TYPE A, 8"
17. SUB-BASE GRANULAR MATERIAL, TYPE A, 12"
18. NOT USED
19. NOT USED
20. CA6 OR CA10 (4") TO BE INCLUDED IN THE COST OF THE HOT-MIX ASPHALT SHOULDERS
21. AREA REFLECTIVE CRACK CONTROL
22. AGGREGATE DITCH, 12"

NOTE: SURFACE AND BINDER COURSE QUANTITIES ARE CALCULATED AT A RATE OF 112 LBS./S.Y.-IN.

REVISIONS	
NAME	DATE

ILLINOIS DEPARTMENT OF TRANSPORTATION
F.A.P. ROUTE 505 (IL 75)

ILLINOIS ROUTE 75
TYPICAL SECTIONS

SCALE: VERT. HORIZ.
DATE: 3/3/09
DRAWN BY MTH
CHECKED BY SPF

PLOT DATE = 3/3/2009
FILE NAME = k:\1195920\il 75-3p east\cadd\design\195801_typSec_03.dgn
PLOT SCALE = 1:50
USER NAME = JTracey
MODEL = Default