ROUTE NO.	SECTION	COUNTY	TOTAL SHEETS	SHEET NO.
FAP 505	**	WINNEBAGO	335	146
FED. ROAD DIST. NO. 7	ILLINOIS	FED. AID PROJECT-		

SHEET NO. 2
3 SHEETS

**111RS-4, 111BR-1, Ya-15d-RS-1,& (W-15d)T-1
Contract # 64970

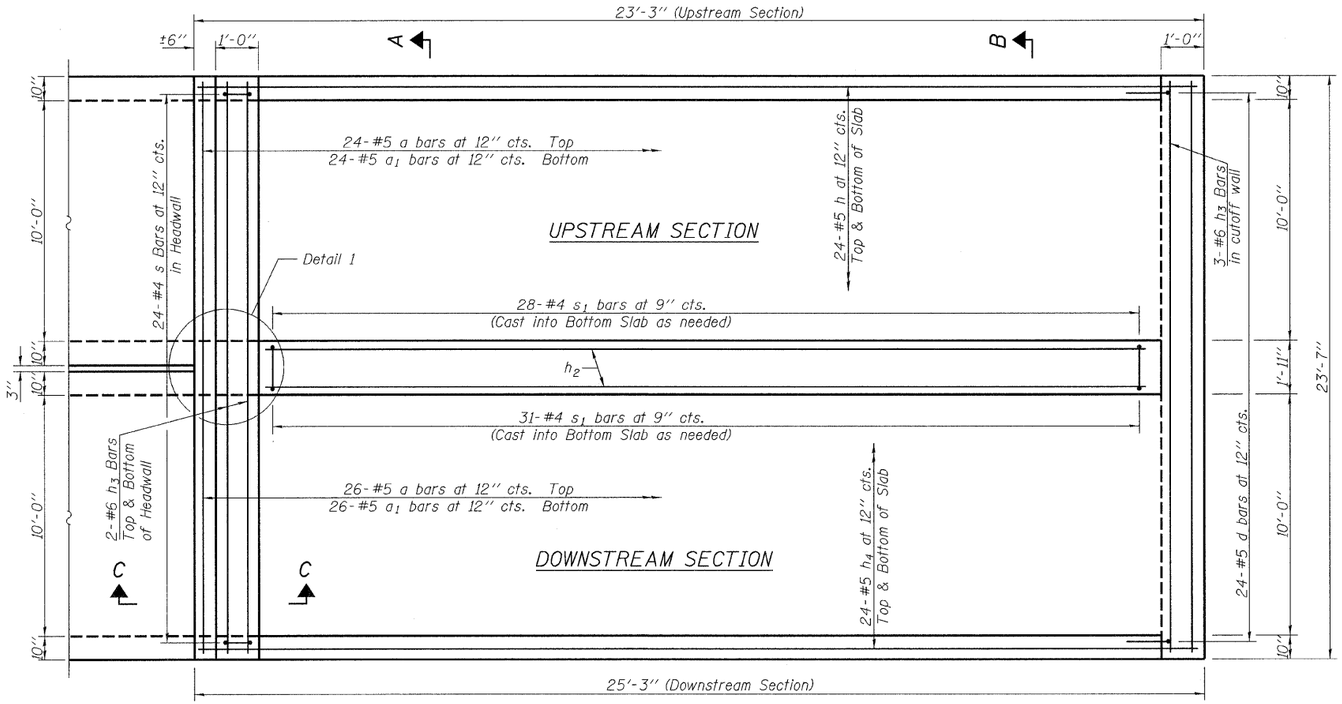

PLAN

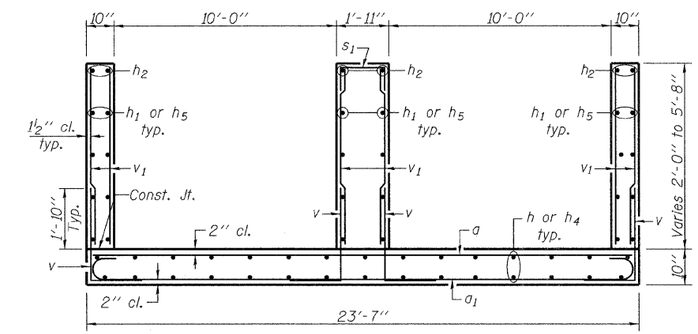

SECTION A-A

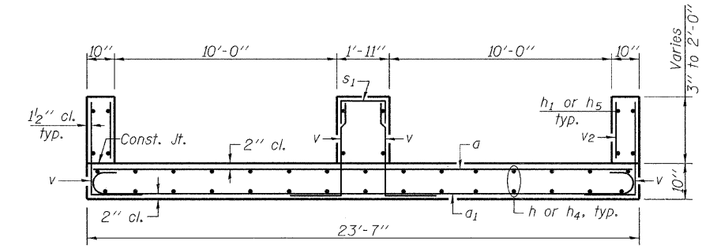

SECTION B-B

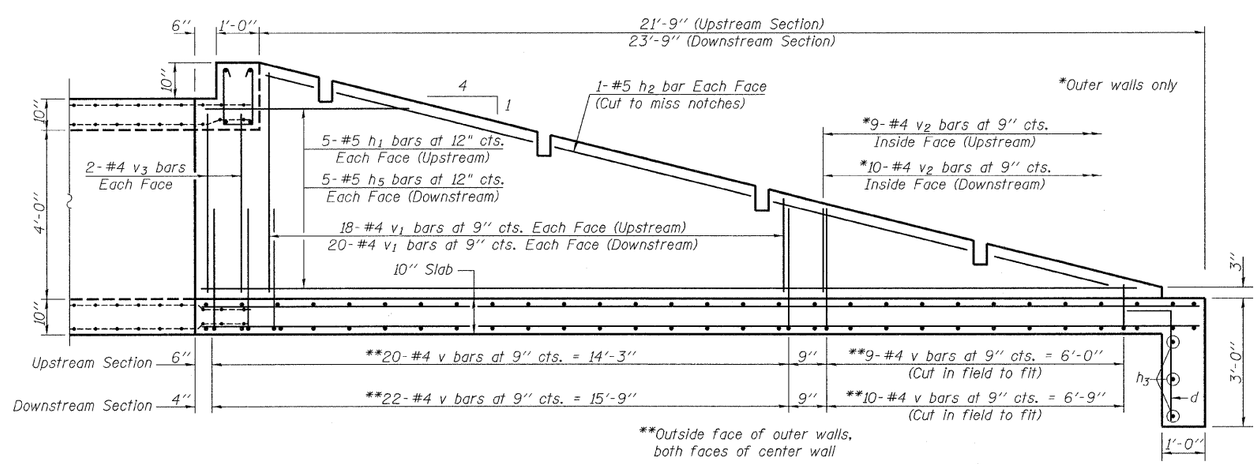

LONGITUDINAL SECTION

NOTES

See Sheet 1 of 3 for General Notes.

See Sheet 3 of 3 for Section C-C and Detail 1.

rjngroup
Excellence through Ownership
200 West Front Street
Wheaton, Il 60187

ILLINOIS DEPARTMENT OF TRANSPORTATION
GRATED CULVERT EXTENSION NO. 11
IL-75 OVER TRIBUTARY TO PECATONICA RIVER
FAP RTE 505 - SECTION
*111RS-4, 111BR-1, Ya-15d-RS-1,& (W-15d)T-1
WINNEBAGO COUNTY
STATION 11025+71
STRUCTURE NO. 101-2049

DATE: 3/03/2009 DRAWN BY BLB CHECKED BY WJV

K:\11195800\IL 75_3P East\Structures\Culvert 11 Extension.dgn
3/2/2009