ROUTE NO.	SECTION	COUNTY	TOTAL SHEETS	SHEET NO.
FAP 505	**	WINNEBAGO	335	156
FED. ROAD DIST. NO. 7		ILLINOIS	FED. AID PROJECT-	

SHEET NO. 3
5 SHEETS

Contract #64970
** (W-15d) T-1

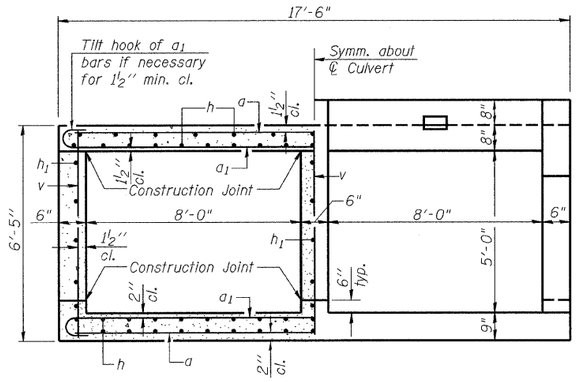

HALF SECTION THRU BARREL

HALF ELEVATION AT END OF BARREL

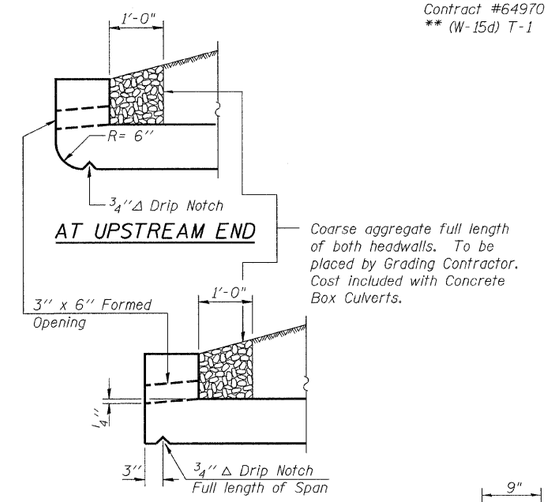

AT UPSTREAM END

Coarse aggregate full length of both headwalls. To be placed by Grading Contractor. Cost included with Concrete Box Culverts.

AT DOWNSTREAM END

DRAIN DETAIL

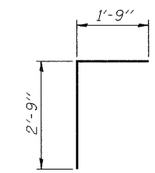

BAR d

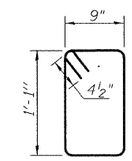

BAR s

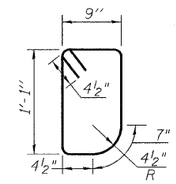

BAR s_1

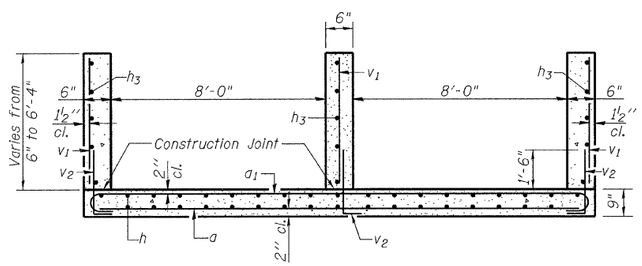

SECTION A-A

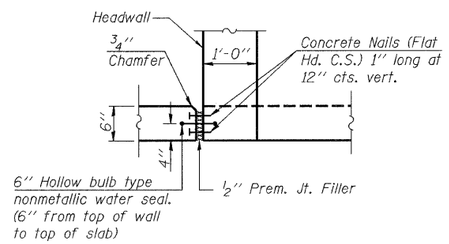

WATER SEAL JOINT DETAIL

Cost of Water Seal Joint Included with Concrete Box Culverts

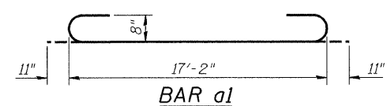

BAR a1

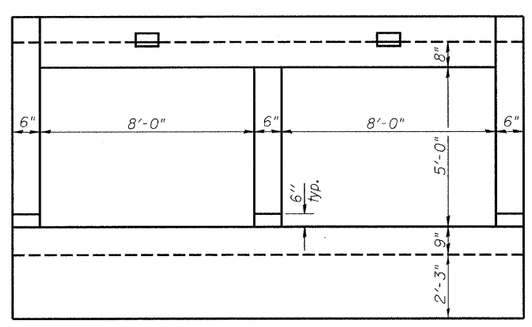

END ELEVATION

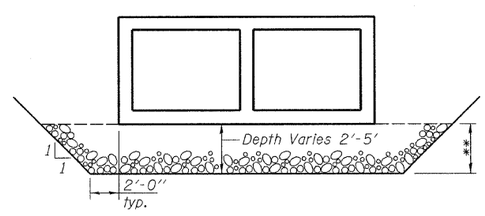

BREAKER RUN CRUSHED STONE DETAIL

** See Schedule of Quantities on Sheet 23 of 335 for Removal of Unsuitable Material

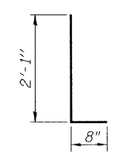

BAR v2

BILL OF MATERIAL

Bar	No.	Size	Length	Shape
a	231	#8	17'-2"	
a_1	231	#8	19'-0"	
d	36	#5	4'-6"	
h	264	#6	31'-0"	
h_1	30	#5	30'-9"	
h_2	14	#6	19'-6"	
h_3	15	#5	35'-0"	
s	20	#4	4'-5"	
s_1	20	#4	4'-3"	
v	240	#4	6'-1"	
v_1	102	#4	7'-7"	
v_2	216	#4	2'-9"	
Concrete Box Culverts			Cu. Yd.	113.1
Reinforcement Bars			Pound	38,700
Breaker Run Crushed Stone			Ton	921

rjngroup
Excellence through Ownership
200 West Front Street
Wheaton, Il 60187

ILLINOIS DEPARTMENT OF TRANSPORTATION
CULVERT DETAILS II
IL 75 OVER UNNAMED TRIBUTARY
TO SOUTH BRANCH OTTER CREEK
FAP RTE 505 - SECTION (W-15d)T-1
WINNEBAGO COUNTY
STATION 11075+29.29
STRUCTURE NO. 101-1082

DATE: 3/03/2009
DRAWN BY JMT
CHECKED BY BLB

3/2/2009 K:\11179214\Structures\2 cell.dgn