ROUTE NO.	SECTION	COUNTY	TOTAL SHEETS	SHEET NO.
FAP Rte 614	144(B-1)	Cass & Mason	351	153
FED. ROAD DIST. NO. 7		ILLINOIS	FED. AID PROJECT-	

SHEET NO. 17
86 SHEETS

Contract #72A76

STATE OF ILLINOIS
DEPARTMENT OF TRANSPORTATION

*Order a(E) bars full length.
Cut to fit skew and use remainder of bars in opposite end.

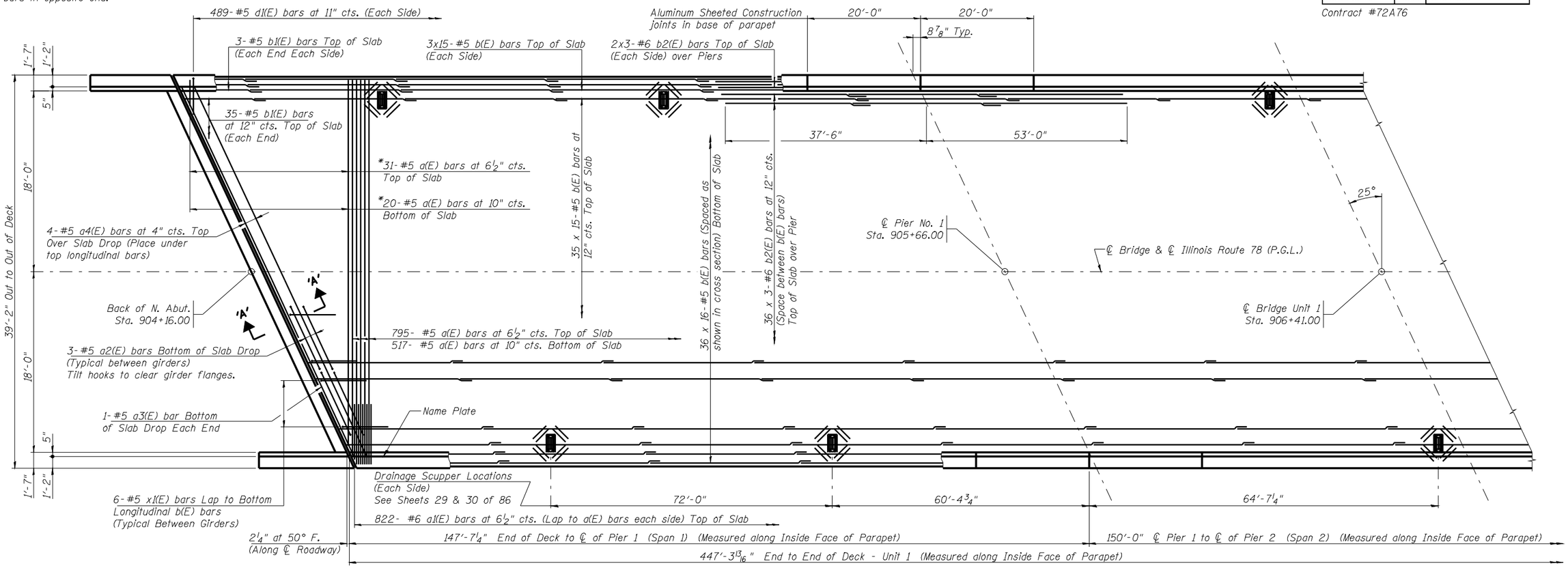

UNIT 1 - HALF PLAN (Spans 1 & 2)

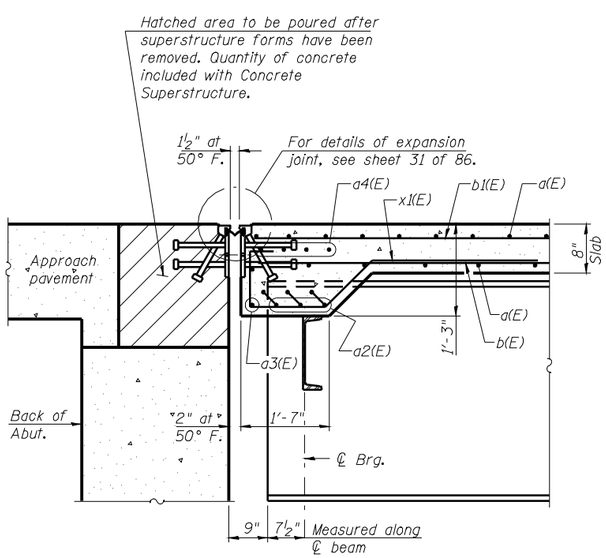

SECTION A-A

(At Rt. Angles to Bk. of Abut. Unless Noted)

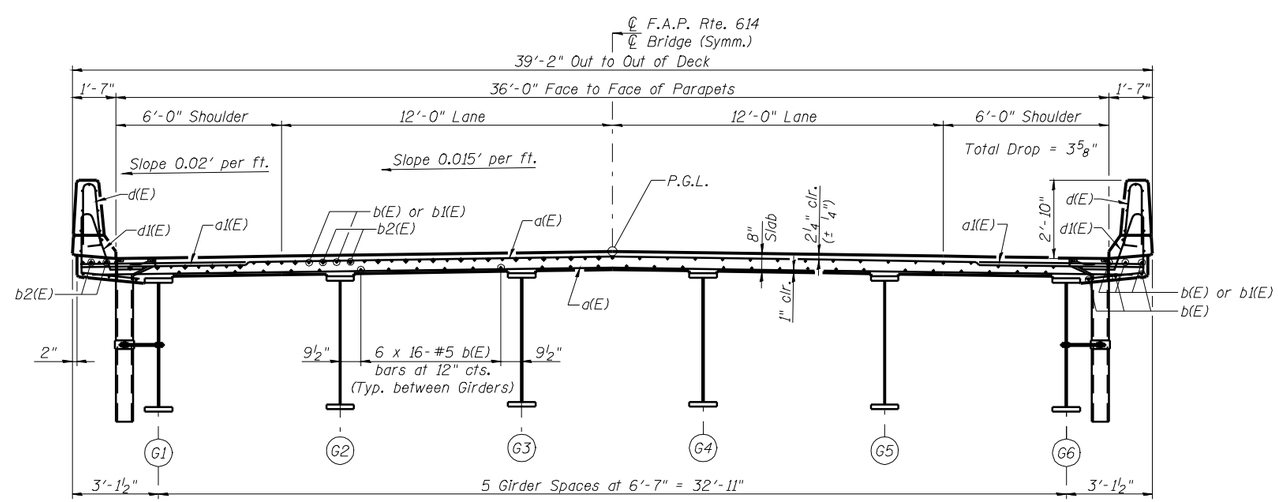

CROSS SECTION

(Looking Upstation)

Notes:

See Sheet 19 of 86 for superstructure details, bar laps and Bill of Material.

Bars indicated thus 20 x 3- #5 etc. indicates 20 lines of bars with 3 lengths per line.

See Sheet 19 of 86 for parapet reinforcement.

Dimensions are based on a Rolled Rail Strip Seal Joint. If the Contractor elects to use the Welded Rail Strip Seal Joint, deck dimensions may require adjustments to satisfy the details on Base Sheet EJ-SSJ, Sheet 31 of 86.

UNIT 1 - SUPERSTRUCTURE HALF PLAN (Spans 1 & 2)
F.A.P. 614 (IL 78) OVER SANGAMON RIVER
PUBLIC WATERS
CASS & MASON COUNTIES
SECTION 144 (B-1)
STA. 913+26.00
STRUCTURE NUMBER 009-0510

PROFESSIONAL DESIGN FIRM LICENSE #184-001084

© Copyright Hanson Professional Services Inc. MS_YEAR

HANSON
Hanson Professional Services Inc.

JOB NO. 07S2026

DATE 03/27/09

LAYOUT	Rod	09/12/08
DRAWN	DAB	09/30/08
REVIEWED	TEH	09/30/08

Mon-31-2009 09:06:29 AM
c:\pw_work\PWIDOT\LANDHILI\hl\d0314498\009-0510 Master Sheet File.dgn