CONTRACT NO. 89477

F.A.S. RTE.	SECTION	COUNTY	TOTAL SHEETS	SHEET NO.
358	86-00075-00-AS	WOODFORD	74	33
STA.		TO STA.		
FED. ROAD DIST. NO.	ILLINOIS	FED. AID PROJECT		

SHEET NO. B7

OF 8 SHEETS

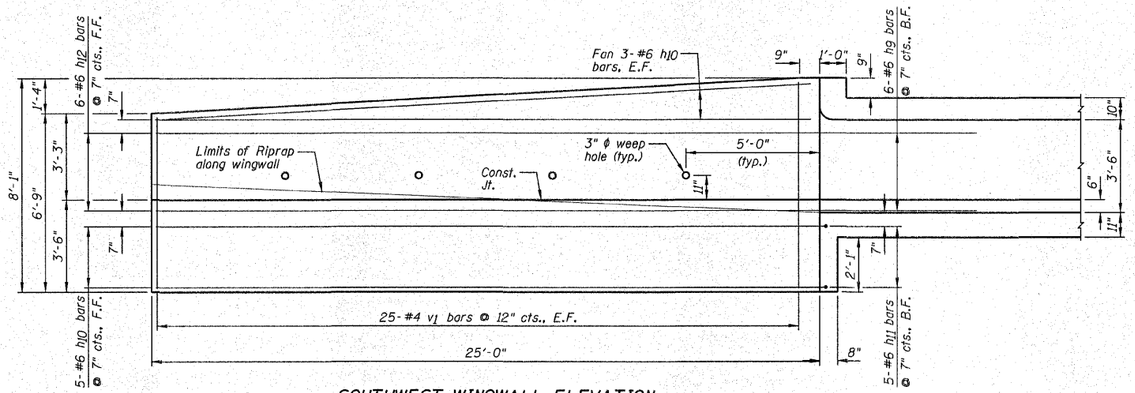

SOUTHWEST WINGWALL ELEVATION

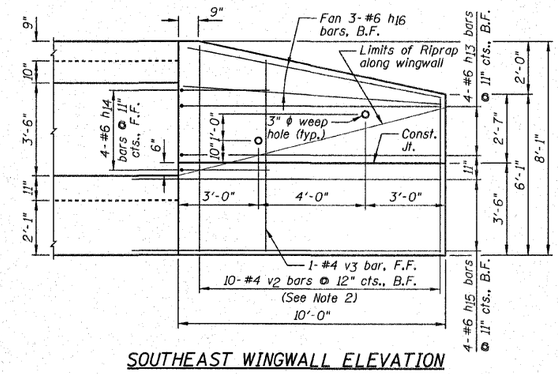

SOUTHEAST WINGWALL ELEVATION

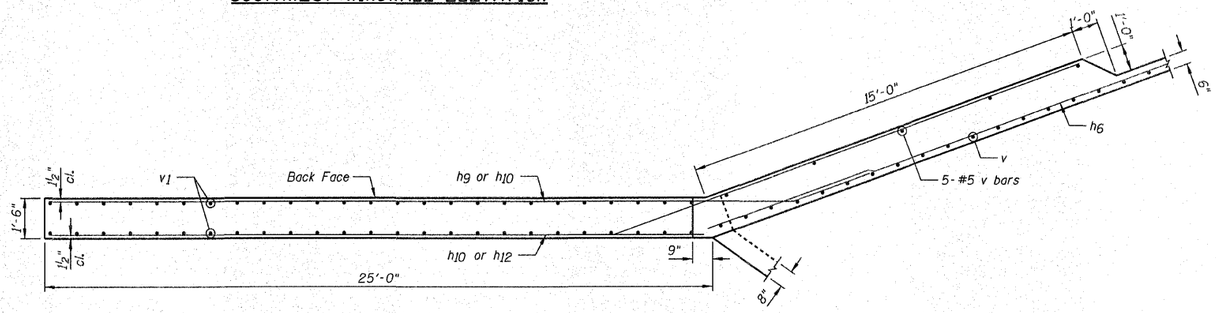

SOUTHWEST WINGWALL UPPER PLAN

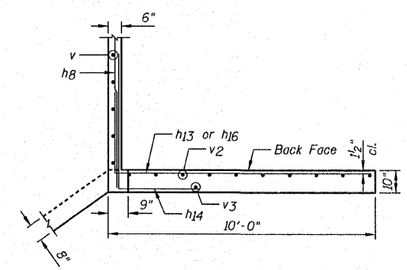

SOUTHEAST WINGWALL UPPER PLAN

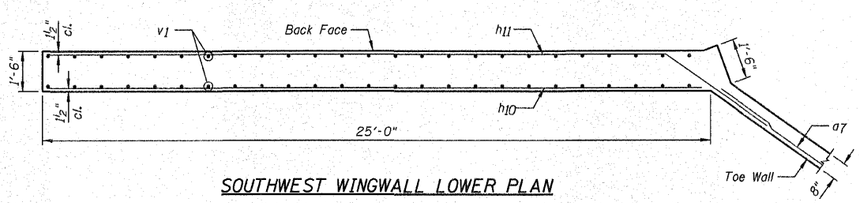

SOUTHWEST WINGWALL LOWER PLAN

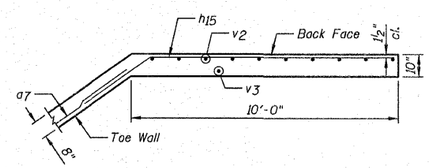

SOUTHEAST WINGWALL LOWER PLAN

NOTES:

1.) Work this sheet with Sheets B1-B6 & B8.
2.) Order v_1 bars and v_2 bars full length, cut according to the Bar Cutting Diagram on Sheet B2. Use remainder of v_1 bars in opposite face and remainder of v_2 bars in the Northeast wingwall.
3.) For Bill of Material, see Sheet B2.
4.) For bar lap length, see the General Notes on Sheet B2.

REVISIONS	
NAME	DATE

WINGWALL DETAILS

F.A.S. 358 (C.H. 18)
SECTION 86-00075-00-AS
WOODFORD COUNTY
STATION 1803+33.20
STRUCTURE NO. 102-5035

DESIGNED BY: MSW DRAWN BY: DJM
DATE: 04/08/09 CHECKED BY: MSW

FARNSWORTH GROUP, INC. CONSULTING ENGINEERS - 2709 MCGRAW DRIVE BLOOMINGTON, ILLINOIS 61704 (309) 663-8435 / (309) 663-1571 FAX

24-8111