SCHEDULE OF QUANTITIES

HEADWALL EXTENSION SCHEDULE

SIDE	STA	THICKNESS IN	HEIGHT IN	LENGTH FT	50800105 HSIP EDGAR REINFORCEMENT BARS POUND	50800105 HSIP DOUGLAS REINFORCEMENT BARS POUND	54003000 HSIP EDGAR CONCRETE BOX CULVERT CU YD	54003000 HSIP DOUGLAS CONCRETE BOX CULVERT CU YD
RT	654+91.09	8.00	10.00	8.50	30.37		0.20	
LT	654+91.13	8.00	8.00	8.83	29.46		0.20	
RT	675+89.34	8.00	10.00	8.00	27.85		0.20	
LT	675+89.47	8.00	6.00	8.00	25.01		0.10	
RT	686+38.71	8.00	6.00	9.00	28.22		0.20	
LT	686+38.53	8.00	8.00	9.50	32.17		0.20	
RT	703+62.39	8.00	8.00	17.50	59.28		0.30	
LT	703+62.21	8.00	6.00	17.50	56.09		0.30	
RT	723+84.02	8.00	8.00	13.50	45.73		0.30	
LT	723+84.17	8.00	8.00	13.17	43.73		0.30	
RT	733+45.39	8.00	6.00	11.50	36.82		0.20	
LT	733+45.37	8.00	8.00	11.50	38.95		0.20	
RT	770+75.77	8.00	10.00	12.50	44.64		0.30	
LT	770+75.78	8.00	10.00	12.50	44.64		0.30	
RT	793+01.31	8.00	4.00	8.00	23.68		0.10	
LT	793+01.31	8.00	10.00	8.00	27.85		0.20	
RT	801+77.01	8.00	8.00	8.00	26.43		0.20	
LT	801+76.95	8.00	10.00	8.83	31.06		0.20	
RT	13+33.29	8.00	8.00	9.75		32.69		0.20
LT	13+33.23	8.00	10.00	9.83		34.63		0.30
RT	126+98.74	8.00	6.00	9.00	28.22		0.20	
LT	126+98.74	8.00	8.00	7.00	23.04		0.20	
RT	296+38.77	8.00	12.00	12.33	57.32		0.40	
LT	296+38.24	8.00	8.00	14.00	46.77		0.30	
				TOTALS =	870.00	70.00	5.50	0.50
				ROUNDED COUNTY TOTALS =	870.00	70.00	5.50	0.50
				TOTALS =	940.00		6.00	

HEADWALL WITH WINGWALLS EXTENSION SCHEDULE

SIDE	STA	THICKNESS IN	HEIGHT IN	NORTH WING LENGTH FT	CENTER LENGTH FT	SOUTH WING LENGTH FT	50800105 HSIP EDGAR REINFORCEMENT BARS POUND	54003000 HSIP EDGAR CONCRETE BOX CULVERT CU YD
LT	218+15.78	8.00	10.00	6.50	6.00	3.50	17.82	0.40
LT	270+89.81	8.00	6.00	5.00	4.00	5.00	15.38	0.20
						TOTALS =	40.00	0.60

FLARED END SECTION

STA	SIDE	54213660 PRECAST REIN. CONCRETE FLARED END SECTIONS 15" EACH	X0322936 REMOVE EXISTING FLARED END SECTION EACH
260+43.12	LT	1.00	1.00
	TOTAL =	1.00	1.00

GUARDRAIL SCHEDULE

	S.N.	DIRECTION	SIDE	STRUCTURE CENTER STA	HAZARDOUS SLOPE START STA	HAZARDOUS SLOPE END STA	SHORT RADIUS/ BENT GUARDRAIL RADII FT	APPR LENGTH L_1 FT	DEP LENGTH L_3 FT	63000001 HSIP EDGAR STEEL PLATE BEAM GUARDRAIL TY-A, 6 FT FT	63000003 HSIP EDGAR STEEL PLATE BEAM GUARDRAIL TY-A, 9 FT FT	63100045 HSIP EDGAR TRAFFIC BARRIER TERMINAL TY-2 EACH	63100087 HSIP EDGAR TRAFFIC BARRIER TERMINAL TY-6A EACH	63100167 HSIP EDGAR TRAFFIC BARRIER TERMINAL TY-1 (SPL) TAN EACH	63200310 HSIP EDGAR GUARDRAIL REMOVAL FT	72501000 HSIP EDGAR TERMINAL MARKER DIRECT APPLIED EACH	72501100 HSIP EDGAR TERMINAL MARKER POST MOUNTED EACH	78200005 HSIP EDGAR GUARDRAIL REFLECTORS TYPE A EACH	1 X6310088 HSIP EDGAR TRAFFIC BARRIER TERMINAL TY-6A SPL EACH	X6330725 HSIP EDGAR STEEL PLATE BEAM GUARDRAIL SHORT RADIUS FT
	S.N. 023-0018	NB	APPR	54+72.84				147.2	88.3	75.00			1.00	1.00	94.00	1.00		4.00		
	S.N. 023-0018	NB	DEP	54+72.84				147.2	88.3	25.00			1.00	1.00	94.00	1.00		4.00		
	S.N. 023-0018	SB	APPR	54+72.84				147.2	88.3	75.00			1.00	1.00	94.00	1.00		4.00		
	S.N. 023-0018	SB	DEP	54+72.84				147.2	88.3	25.00			1.00	1.00	94.00	1.00		4.00		
	S.N. 023-2014	NB	APPR	69+81.89				147.2	88.3	75.00			1.00	1.00	94.00	1.00		4.00		
	S.N. 023-2014	NB	DEP	69+81.89				147.2	88.3	25.00			1.00	1.00	94.00	1.00		4.00		
	S.N. 023-2014	SB	APPR	69+81.89			22	147.2	88.3	12.50			1.00	1.00	115.00	1.00		4.00		
	S.N. 023-2014	SB	DEP	69+81.89				147.2	88.3	25.00			1.00	1.00	94.00	1.00		4.00		
*	S.N. 023-2010	NB	APPR	135+27.00			8,16	141.7	85.0	60.00		2.00		1.00	27.00	1.00	2.00	4.00	1.00	12.50
	S.N. 023-2010	NB	DEP	135+27.00				141.7	85.0	25.00				1.00	178.00	1.00		4.00	1.00	
	S.N. 023-2010	SB	APPR	135+27.00			8,8	141.7	85.0	25.00		2.00		1.00	104.00	1.00	2.00	4.00	1.00	25.00
	S.N. 023-2010	SB	DEP	135+27.00				141.7	85.0	25.00				1.00	177.00	1.00		4.00	1.00	
	N/A	NB	BOTH	243+86.00	243+30.00	244+40.00		158.3	95.0		300.00			2.00	378.00	2.00		5.00		
	N/A	NB	BOTH	270+90.00				166	100.0		200.00			2.00						
	N/A	SB	BOTH	270+90.00				166	100.0		200.00			2.00						
									TOTALS =	472.50	700.00	4.00	8.00	18.00	1637.00	14.00	4.00	53.00	4.00	37.50

* TRAFFIC BARRIER TERMINAL TYPE 6A SPL SHALL BE BENT BETWEEN POSTS 1-11 WITH A RADIUS OF 16FT

MODEL: $MODELNAME$
FILE NAME: pw:\\dallanroom.dot.illinois.gov:PWIDOT\Documents\IDOT Offices\District 5\Projects\D570D74\CADData\CADsheets\D570D74-sht-Revised-39.dgn

USER NAME = PIERSONTJ	DESIGNED -	REVISED -	
	DRAWN -	REVISED -	
PLOT SCALE = 40.0000 ' / in.	CHECKED -	REVISED -	
PLOT DATE = 5/26/2020	DATE -	REVISED -	

STATE OF ILLINOIS
DEPARTMENT OF TRANSPORTATION

SCHEDULE OF QUANTITIES

SCALE: SHEET 20 OF 24 SHEETS STA. TO STA.

F.A.P. RTE.	SECTION	COUNTY	TOTAL SHEETS	SHEET NO.
836	**	*	224	39
		CONTRACT NO. 70D74		
	ILLINOIS	FED. AID PROJECT		

**(116,117)RS-5, D5 HSIP 2020-1

* DOUGLAS & EDGAR

1 REVISED 5/28/20

OPTION 1

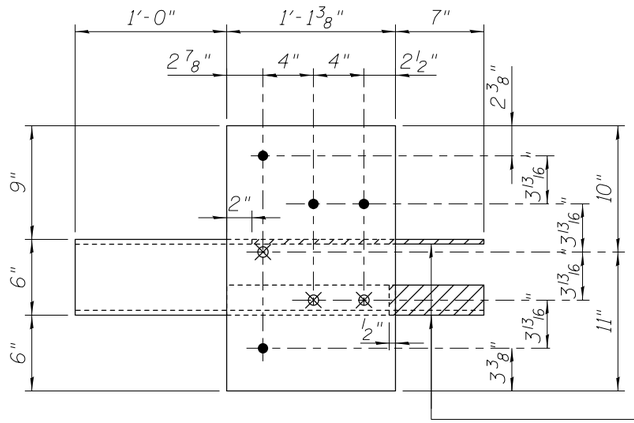

Hatched portions of 3/8" Plate and L 4 x 4 x 3/8 shall be removed or omitted. If removed after galvanizing, the exposed bare metal shall be coated with an approved zinc rich paint.

GUARDRAIL CONNECTION PLATE ASSEMBLY

(Modified from Std. 631032)

OPTION 2

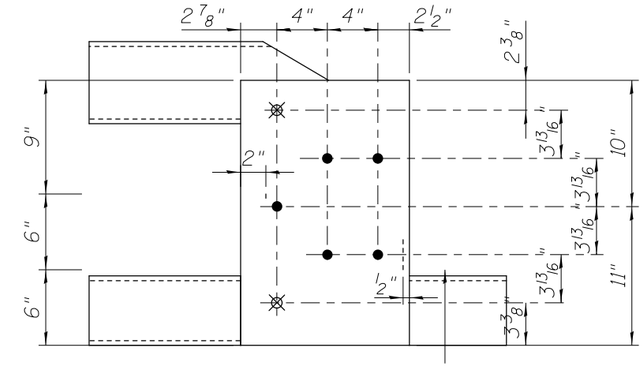

GUARDRAIL CONNECTION PLATE ASSEMBLY

(Modified from Std. 631032)

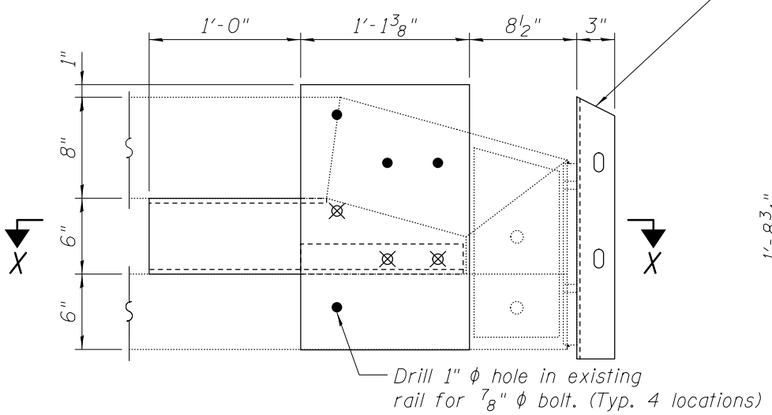

END OF RAIL DETAILS

(Typical at 2 corners of bridge)

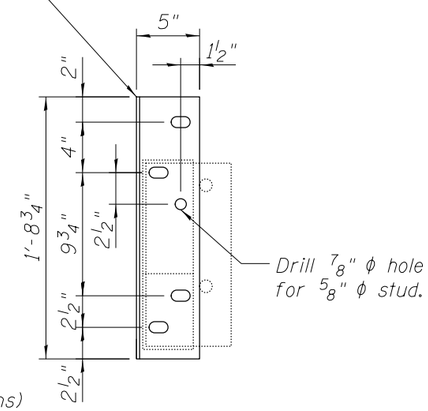

END VIEW

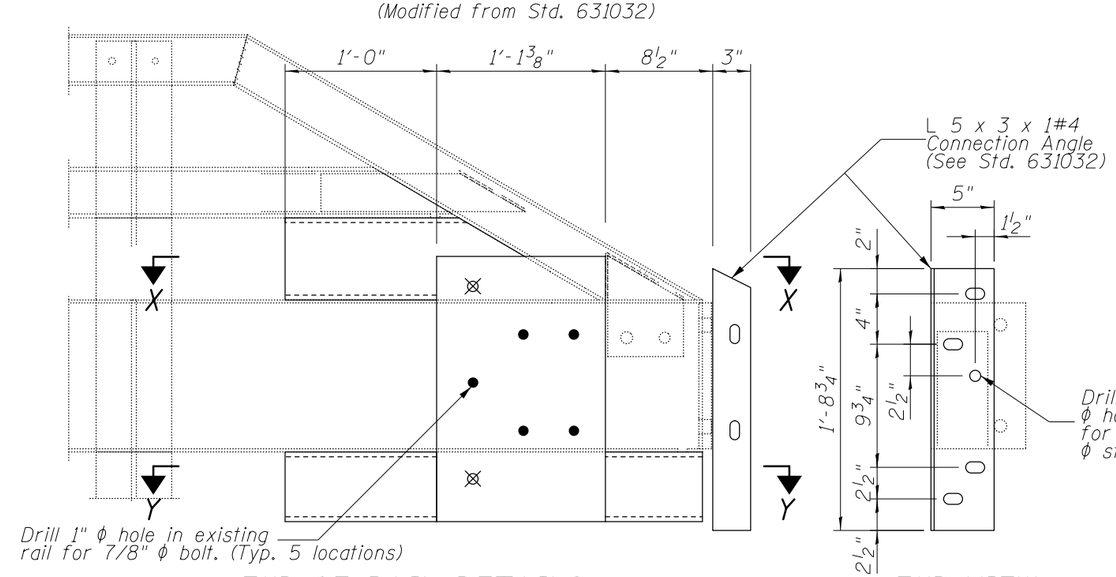

END OF RAIL DETAILS

(Typical at 2 corners of bridge)

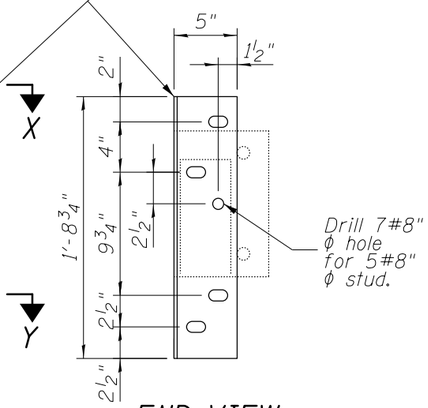

END VIEW

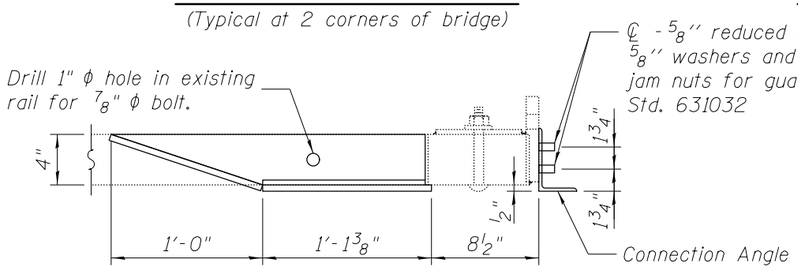

SECTION X-X

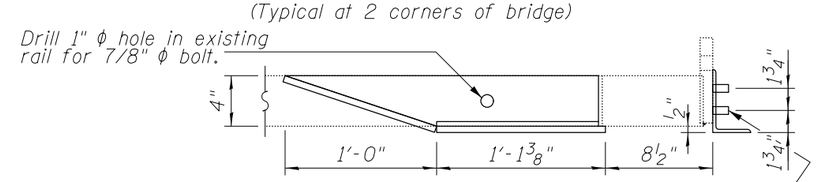

SECTION X-X

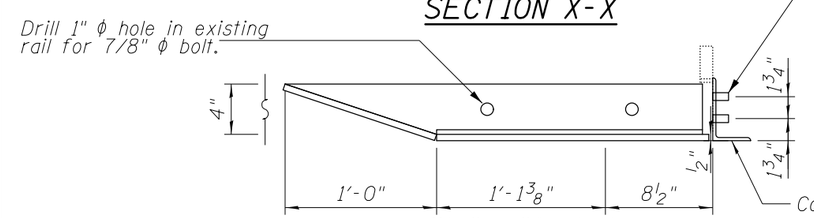

SECTION Y-Y

℄ - 5#8'' reduced base welded studs. Provide 4 - 5#8'' washers and self-locking nuts or nuts and jam nuts for guardrail connection shown on Std. 631032

1

TRAFFIC BARRIER TERMINAL TYPE 6A (SPECIAL) MOUNTING DETAILS

USER NAME = PIERSONTJ	DESIGNED -	REVISED -	
	DRAWN -	REVISED -	
PLOT SCALE = 2.0000 ' / in.	CHECKED -	REVISED -	
PLOT DATE = 5/26/2020	DATE -	REVISED -	

STATE OF ILLINOIS
DEPARTMENT OF TRANSPORTATION

SCALE: N.T.S. | SHEET 1 OF 1 SHEETS | STA. | TO STA.

F.A.P. RTE.	SECTION	COUNTY	TOTAL SHEETS	SHEET NO.
836	**	*	224	89

CONTRACT NO. 70D56

ILLINOIS | FED. AID PROJECT

**118RS-3,119RS-4,D5 HSIP 2019-1

*CHAMPAIGN & VERMILION

1 REVISED 5/28/20

MODEL: $MODELNAMES
FILE NAME: pw:\\uhanoom.dot.illinois.gov:PWIDOT\Documents\IDOT Offices\District 5\Projects\D570D74\CADData\CADSheets\D570D74-sht-Revised-89.dgn

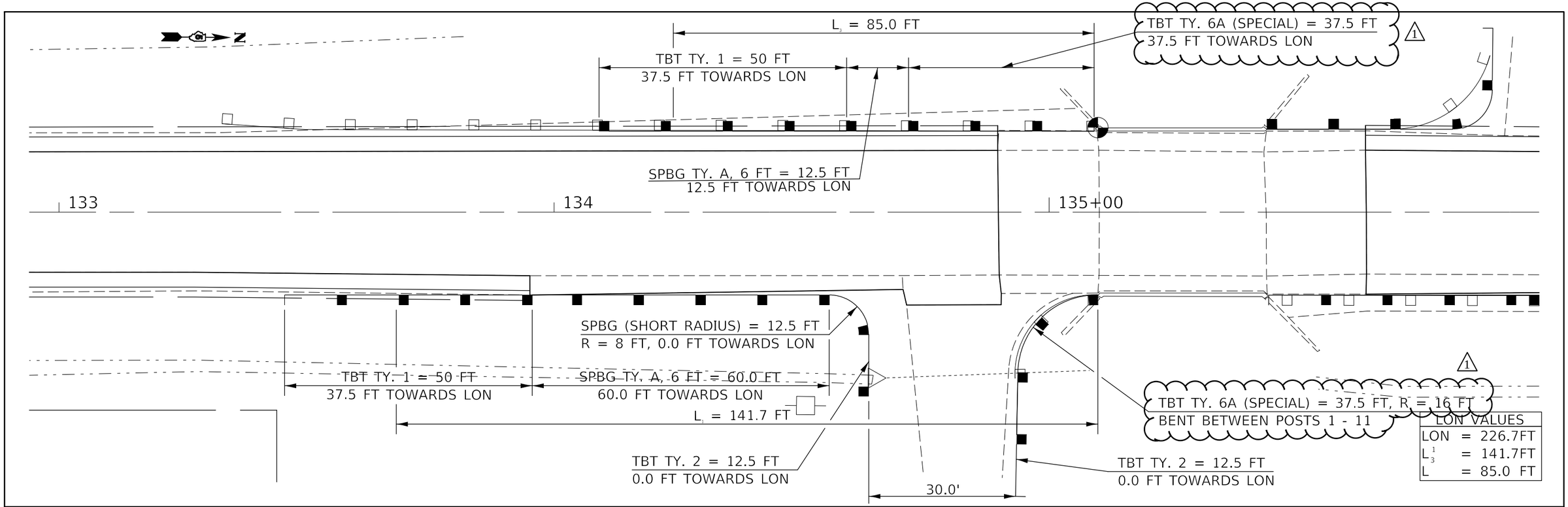

USER NAME = PIERSONTJ	DESIGNED -	REVISED -	
	DRAWN -	REVISED -	
PLOT SCALE = 20.0000 ' / in.	CHECKED -	REVISED -	
PLOT DATE = 5/26/2020	DATE -	REVISED -	

STATE OF ILLINOIS
DEPARTMENT OF TRANSPORTATION

GUARDRAIL DETAIL
S.N. 023-2010

SCALE: 1" = 10' | SHEET 3 OF 5 SHEETS | STA. TO STA.

F.A.P. RTE.	SECTION	COUNTY	TOTAL SHEETS	SHEET NO.
836	**	*	3	3
		CONTRACT NO. 70D74		
	ILLINOIS	FED. AID PROJECT		

**(116,117)RS-5, D5 HSIP 2020-1

* DOUGLAS & EDGAR

1 REVISED 5/28/20

MODEL: $MODELNAMES
FILE NAME: pw:\\ildwroom.dot.illinois.gov:PWIDOT\Documents\IDOT Offices\District 5\Projects\D570074\CADData\CADsheets\D570374-cnt-Revised-92.dgn