| F.A.I. RTE. | SECTION | COUNTY | TOTAL SHEETS | SHEET NO. |
|---|---|---|---|---|
| 55 | * | WILL | 608 | 22 |
| STA. | | TO STA. | | |
| FED. ROAD DIST. NO. 1 | ILLINOIS | FED. AID PROJECT | | |

* (26, 26HB-1&114) R-2 CONTRACT NO. 60363

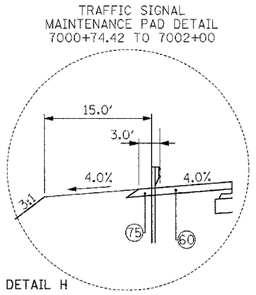


DETAIL H

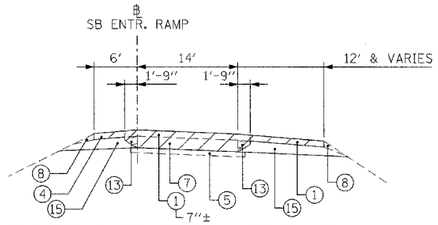


## EXISTING SB ENTRANCE RAMP

SOUTHBOUND RAMP STA. 128+91.40 TO STA. 129+18.32
(LOOKING NORTH)

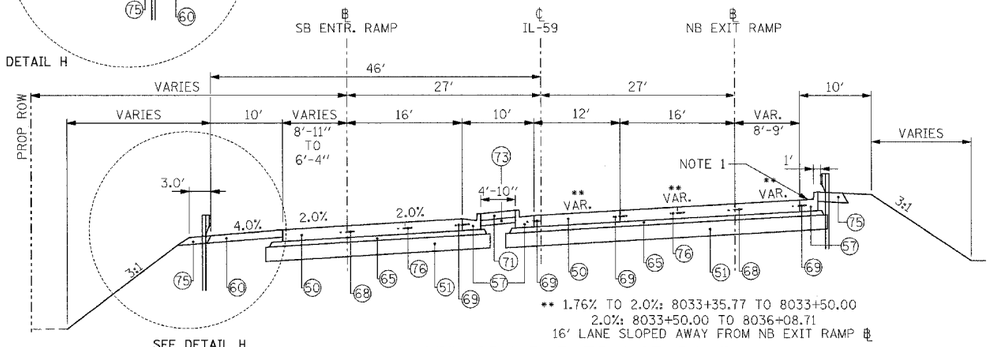


** 1.76% TO 2.0%: 8033+35.77 TO 8033+50.00
2.0%: 8033+50.00 TO 8036+08.71
16' LANE SLOPED AWAY FROM NB EXIT RAMP ℄

## PROPOSED SB/NB ENTRANCE RAMP

SOUTHBOUND RAMP STA. 7001+05.15 TO STA. 7003+30.36
NORTHBOUND RAMP STA. 8033+35.77 TO STA. 8036+08.71
PAVEMENT TYPE CONTINUES THROUGH INTERSECTION
(LOOKING NORTH)

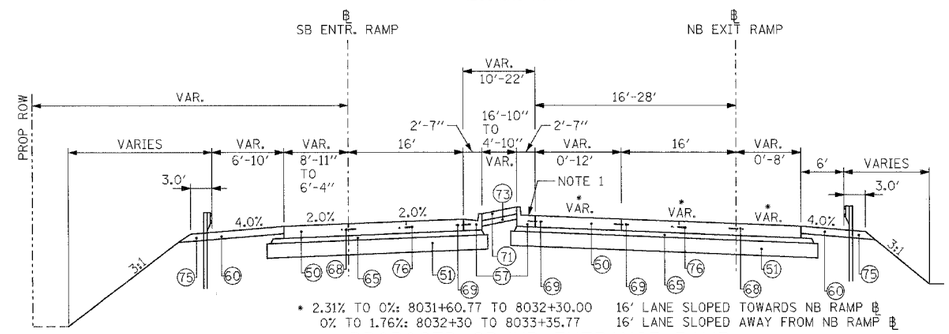


* 2.31% TO 0%: 8031+60.77 TO 8032+30.00
0% TO 1.76%: 8032+30 TO 8033+35.77
16' LANE SLOPED TOWARDS NB RAMP ℄
16' LANE SLOPED AWAY FROM NB RAMP ℄

## PROPOSED SB/NB ENTRANCE RAMP

SOUTHBOUND RAMP STA. 7003+30.36 TO STA. 7005+05.36
NORTHBOUND RAMP STA. 8031+60.77 TO STA. 8033+35.77
(LOOKING NORTH)

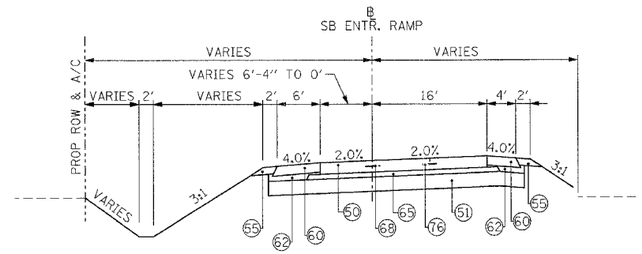


## PROPOSED SB ENTRANCE RAMP

SOUTHBOUND RAMP STA. 7005+05.36 TO STA. 7009+00.00
(LOOKING NORTH)

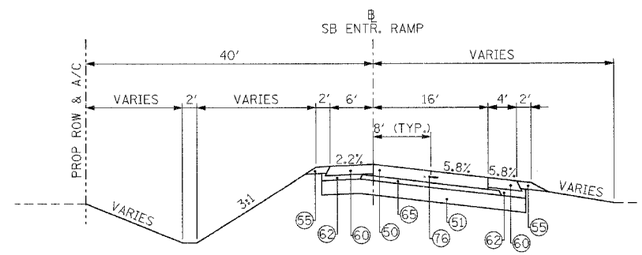


## PROPOSED SB ENTRANCE RAMP

SOUTHBOUND RAMP STA. 7009+00.00 TO STA. 7020+01.50
S.E. TRANS. (FROM 2.0% TO -5.8%): STA. 7009+00.00 TO STA. 7011+65.00
S.E. TRANS. (FROM -5.8% TO 0%): STA. 7016+46.00 TO STA. 7020+01.50
(LOOKING NORTH)

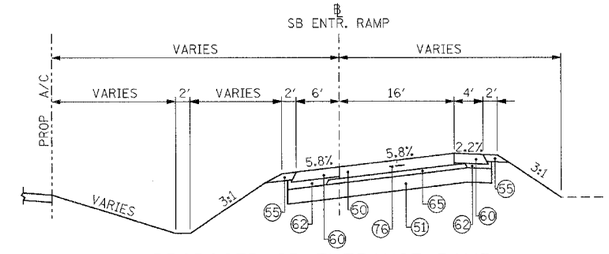


## PROPOSED SB ENTRANCE RAMP

SOUTHBOUND RAMP STA. 7020+01.50 TO STA. 7026+11.91
S.E. TRANS. (FROM 0% TO 5.8%): STA. 7020+01.50 TO STA. 7021+90.00
S.E. TRANS. (FROM 5.8% TO 2.0%): STA. 7025+95.00 TO STA. 7027+45.00
(LOOKING NORTH)

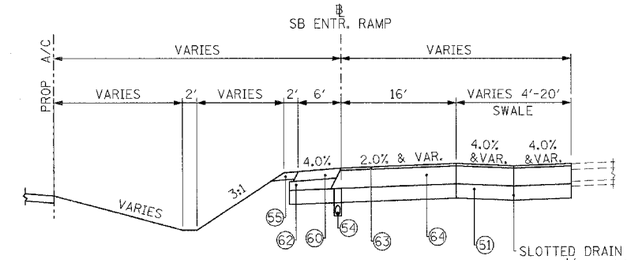


SLOTTED DRAIN 12" WITH 2½" SLOT SEE DRAINAGE DETAILS

## PROPOSED SB ENTRANCE RAMP

SOUTHBOUND RAMP STA. 7026+11.91 TO STA. 7032+42.63
(LOOKING NORTH)

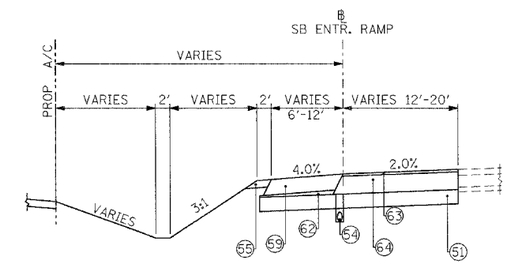


## PROPOSED SB ENTRANCE RAMP

SOUTHBOUND RAMP STA. 7032+42.63 TO STA. 7035+70.90
(LOOKING NORTH)

NOTE 1:
GUTTER SLOPE AT 2%. SLOPE DIRECTION SHALL MATCH ROADWAY.

REMOVAL

1. BITUMINOUS CONCRETE PAVEMENT
2. BIT. RESURFACING 3½" AND VARIES
3. HMA BASE CSE 8"
4. BITUMINOUS SHOULDER
5. SUB BASE GRA. MATERIAL 4"
6. PIPE UNDERDRAIN 6"
7. P.C.C. PAVEMENT, 10" AND VARIES
8. AGG. SHOULDER STONE TYPE B
9. AGG. SUBGRADE 4"
10. POL HMA SC SMA N80 1¾
11. POL HMA BC SMA N80 1¾
12. P.C.C BASE COURSE 9"-7"-9"
13. CONC GUTTER TYPE B 6"
14. AGG. SUBGRADE (VARIES)
15. EARTH EXCAVATION
16. BIT. BASE COURSE 10"
17. CONC GUTTER TYPE B-6.24
18. GRAVEL BASE COURSE
19. CONC BASE COURSE
20. GRANULAR SUB-BASE 8"±
21. CONC. BARRIER, DOUBLE FACE, 42" HEIGHT
22. BARRIER BASE
23. AGGREGATE SUBGRADE 12"
24. STORM SEWER
25. FENCE (REMOVAL)
26. STABILIZED SUB-BASE 4"
27. HMA BASE CSE 2½"
28.

## PROPOSED LEGEND

= INCIDENTAL ITEMS

50. P.C.C. PAVEMENT JOINTED 9¾"
51. AGGREGATE SUBGRADE 12"
52. P HMA SC "F" N90 - 2"* } *TO BE PAID FOR AS HMA PAVT FD 15¾
53. HMA BC IL-19.0 N90 - 13¾"* }
54. PIPE UNDERDRAINS 6"
55. AGGREGATE SHOULDERS, TYPE B 8"
56. CHAIN LINK FENCE, 4'
57. CURB AND GUTTER TYPE B-6.24
58. DEPRESSED CURB AND GUTTER TYPE B-6.24
59. HMA SHOULDERS 13"
60. HMA SHOULDERS 8"
61. FURNISHED EXCAVATION
62. AGGREGATE SUBGRADE
63. P HMA SC "F" N90 - 2"** } **TO BE PAID FOR AS HMA PAVT FD 17
64. P HMA BC IL19.0 N90 - 15"** }
65. STAB SUBBASE HMA 4"
66. HMA SC "C" N50 - 2"*** } ***TO BE PAID FOR AS HMA PAVT FD 9
67. HMA BC IL-19.0 N50 - 7"*** }
68. LONGITUDINAL SAWED JOINT WITH NO. 6 TIE BARS @ 30" CTS
69. LONGITUDINAL CONSTRUCTION JOINT WITH NO. 6 TIE BARS @ 24" CTS
70. SODDING, SALT TOLERANT - 4" TOPSOIL
71. CONCRETE MEDIAN SURFACE, 5" (SPECIAL)
72. 7' - PCC SIDEWALK 5"
73. AGGREGATE BASE COURSE, TYPE B 4"
74. SEEDING, CLASS 2A - 4" TOPSOIL
75. HMA STAB AT SPBGR (PAID FOR AS HMA SHOULDERS 8")
76. SAWED LONGITUDINAL JOINT WITH NO. 6 TIE BARS @ 18" CTS

| REVISIONS | |
|---|---|
| NAME | DATE |
| | |

ILLINOIS DEPARTMENT OF TRANSPORTATION
FAI 55 AT FAP 338 ILLINOIS ROUTE 59
SECTION: (26, 26HB-1&114) R-2

# SB ENTRANCE RAMP STA. 7000+57.84 TO STA. 7035+70.90

SCALE: N.T.S. DRAWN BY: JB
DATE: 03/14/08 CHECKED BY: ACL

TENG
TRANSPORTATION ENGINEERING & ASSOCIATES, INC.
ENGINEERS & SCIENTISTS
209 N. MICHIGAN AVE. CHICAGO, IL 60601
TELEPHONE: 312-782-3000


BONDHUJO
55565758596061626 3
.\TTBOORNA.DGN,..\TSCOORNV.DGN,..\TSCOORWA.DGN,..\TSCOORWT.DGN
3-13-2008, 2:62:52 T:\DOCUMENT\93279O\CIVIL\DGN\TSCOORWS.DGN
1 2 3 4 5 6 7 8 9 10 11 12 13 14 15 16 17 18 19 20 21 22 23 24 25 26 27 28 29 30 31 32 33 34 35 36 37 38 39 40 41 42 43 44 45 46 47 48 49 50 51 52 53 54 55 56 57 58 59