F.A.U. RTE.	SECTION	COUNTY	TOTAL SHEETS	SHEET NO.
2943	1999-162 RS	COOK		5
STATE ROAD DIST. NO. 1	ILLINOIS	HIGHWAY PROJECT		

CONTRACT NO. 60829

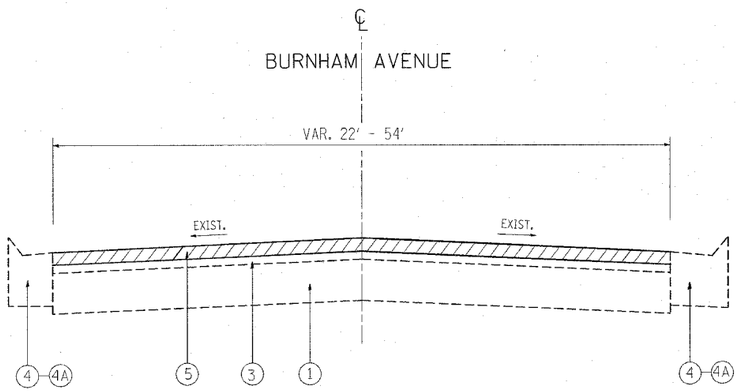

BURNHAM AVE.
EXIST. TYPICAL SECTION
STA. 96+00 TO STA. 225+79.5
STA. 226+59.8 TO STA. 264+18

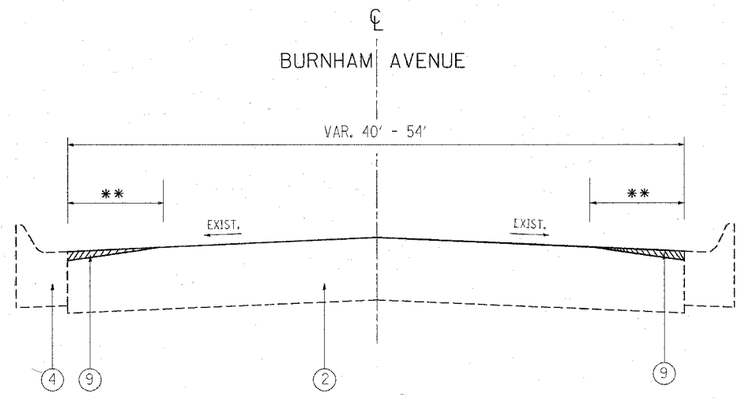

BURNHAM AVE.
EXIST. TYPICAL SECTION
STA. 225+79.5 TO STA. 226+59.5
STA. 60+68.6 TO STA. 66+46.5 (VAN DAM RD.)

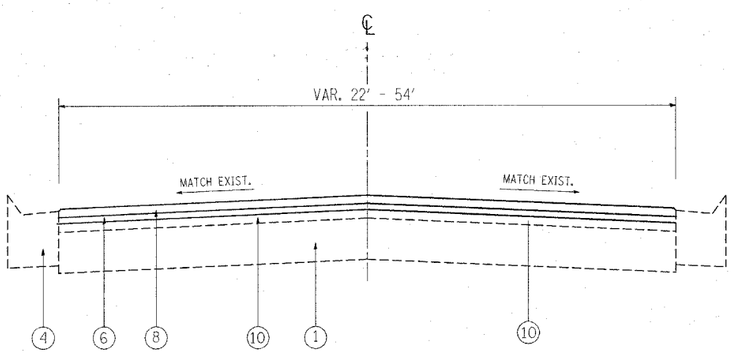

BURNHAM AVE.
PROP. TYPICAL SECTION
STA. 96+00 TO STA. 225+79.5
STA. 226+59.8 TO STA. 264+18

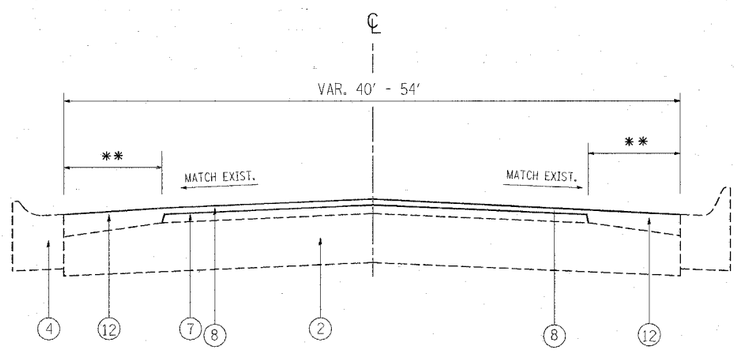

BURNHAM AVE.
PROP. TYPICAL SECTION
STA. 225+79.5 TO STA. 226+59.5
STA. 60+68.6 TO STA. 66+46.5 (VAN DAM RD.)

LEGEND

1. EXIST. P.C.C. BASE (9")
2. EXISTING P.C. C. CONCRETE PAVEMENT (10")
3. EXIST. HOT-MIX ASPHALT AFTER MILLING 5 3/4"
3A. EXIST. AGGREGATE SHOULDER
4. EXIST. COMB. CONC. CURB & GUTTER, TYPE B-6.12 OR B-6.18
4A. EXIST. HOT-MIX ASPHALT SHOULDER (STA. 95+20 TO 116+00)
5. PROP. HMA SURFACE REMOVAL, 2 1/4 "
6. PROP. POLY. LEVELING BINDER (MACHINE METHOD), IL-4.75, N50, 3/4 "
7. PROP. LEVELING BINDER (MACHINE METHOD), N70 ,1"
8. PROP. HMA SURFACE COURSE MIX D, N70, 1 1/2 "
9. PROP. PORTLAND CEMENT CONCRETE SURFACE REMOVAL, (VARIABLE DEPTH) [0 TO 1¼"]
10. HMA OVERLAY AFTER MILLING
11. PROP. HMA SURFACE REMOVAL (VARIABLE DEPTH) [1/2" TO 1 1/2 "]
12. PROP. HMA SURFACE COURSE MIX D, N70 (VARIABLE DEPTH) [2 1/2" TO 1 1/2 "]
13. PROP. AGGREGATE WEDGE SHOULDER, TYPE B

MIXTURE REQUIREMENTS

MIXTURE USES	AC TYPE	VOIDS
HOT-MIX ASPHALT SURFACE COURSE, MIX "D", N70 (IL-9.5 mm)	PG 64-22	4% AT 70 GYR.
POLY. LEVELING BINDER (MACHINE METHOD), IL-4.75, N50	SBS/SBR PG 76-28/-22	4% AT 50 GYR.
LEVELING BINDER (MACHINE METHOD), N70	PG 64-22 *	4% AT 70 GYR.
CLASS D PATCHES (HMA BINDER IL-19 mm)	PG 64-22 *	4% AT 70 GYR.
HOT-MIX ASPHALT REPLACEMENT OVER PATCHES (HMA BINDER IL-19 mm)	PG 64-22 *	4% AT 70 GYR.

NOTE 1: THE UNIT WEIGHT USED TO CALCULATE ALL HOT-MIX ASPHALT SURFACE MIXTURE IS 112 LBS/SQYD/IN

* NOTE 2: WHEN RAP EXCEEDS 20% THE NEW ASPHALT BINDER IN THE MIX SHALL BE PG 58-22

** SEE HMA TAPER AT EDGE OF P.C.C PAVEMENT DETAIL

REVISIONS	
NAME	DATE
A. KRIKONIS	7/27/00

ILLINOIS DEPARTMENT OF TRANSPORTATION

TYPICAL SECTIONS
BURNHAM AVENUE
170 TH ST. TO IL 83 (TORRENCE AVE.)

SCALE: VERT. HORIZ. NONE
DATE
DRAWN BY AK
CHECKED BY FRITZ

4/14/2008
c:\projects\edi41599\bn_rdwy.dgn

VI=TYP1