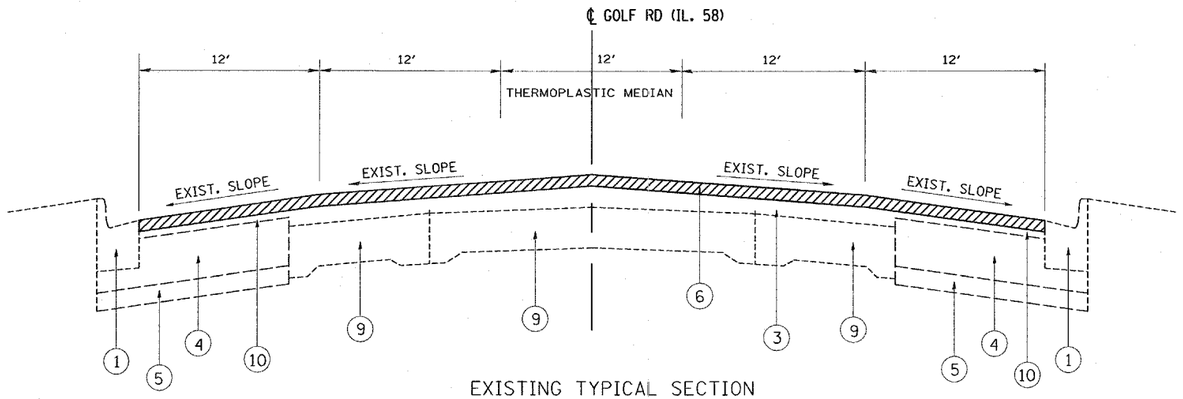

EXISTING TYPICAL SECTION
STA. 33+43 TO STA. 62+71

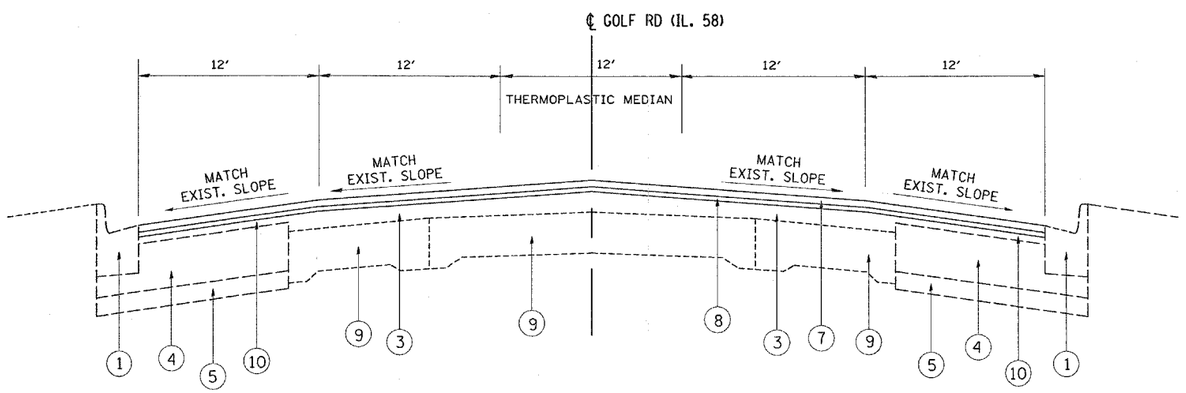

PROPOSED TYPICAL SECTION
STA. 33+43 TO STA. 62+71

LEGEND

1. EXISTING CURB & GUTTER, TYPE B-6.12
2. EXISTING CURB & GUTTER, TYPE B-6.24
3. EXISTING HMA AFTER MILLING SURFACE, 3 1/2 "
4. EXISTING HMA BASE COURSE, 11¼"
5. EXISTING GRANULAR SUBBASE, 4"
6. PROPOSED HMA SURFACE REMOVAL 2½"
7. PROPOSED POLYMERIZED HOT-MIX ASPHALT SURFACE COURSE, MIX "F", N90, 1¾"
8. PROPOSED POLYMERIZED LEVELING BINDER (MACHINE METHOD), IL-4.75, N50, ¾"
9. EXISTING PCC PAVEMENT
10. EXISTING HMA AFTER MILLING SURFACE, 2 1/4"
11. EXISTING MEDIAN

FILE NAME = c:\projects\d125807\sh_rdwy_ao.dgn	USER NAME = osmanhm	DESIGNED -	REVISED -	STATE OF ILLINOIS DEPARTMENT OF TRANSPORTATION	IL. RTE. 58 (GOLF ROAD) TYPICAL CROSS SECTIONS		F.A.P RTE.	SECTION	COUNTY	TOTAL SHEETS / SHEET NO.
		DRAWN -	REVISED -				339	2007-017RS	COOK	33 / 5
	PLOT SCALE = 50.0000 ' / IN.	CHECKED -	REVISED -						CONTRACT NO. 60C72	
	PLOT DATE = 4/15/2008	DATE -	REVISED -		SCALE: NONE	SHEET NO. OF SHEETS	STA.	TO STA.	FED. ROAD DIST. NO. 1 ILLINOIS	FED. AID PROJECT