STATE OF ILLINOIS
DEPARTMENT OF TRANSPORTATION

ROUTE NO.	SECTION	COUNTY	TOTAL SHEETS	SHEET NO.
F.A.P. 351	2008-001VB	COOK	579	355
FED. ROAD DIST. NO. 7	ILLINOIS	FED. AID PROJECT-		

SHEET NO. 7
37 SHEETS

CONTRACT NO. 60E10

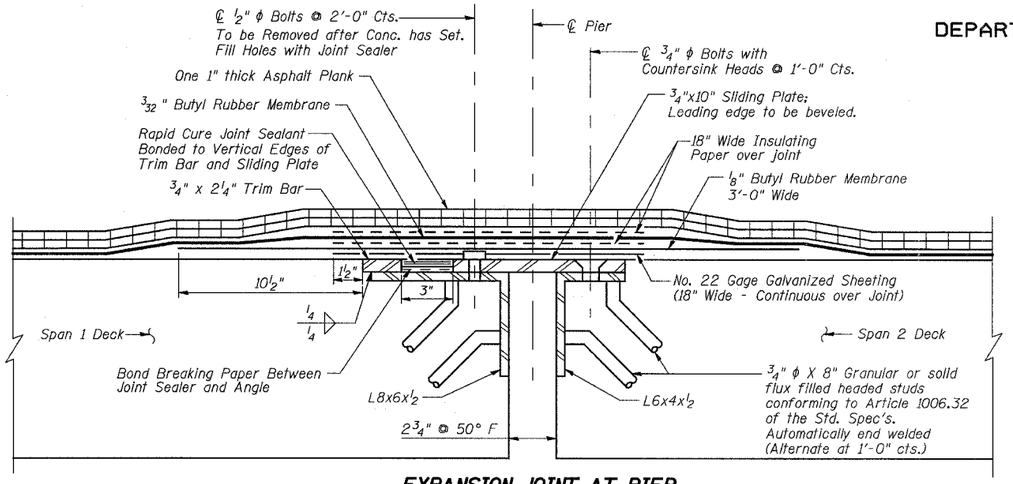

EXPANSION JOINT AT PIER
(SECTION Q-Q)

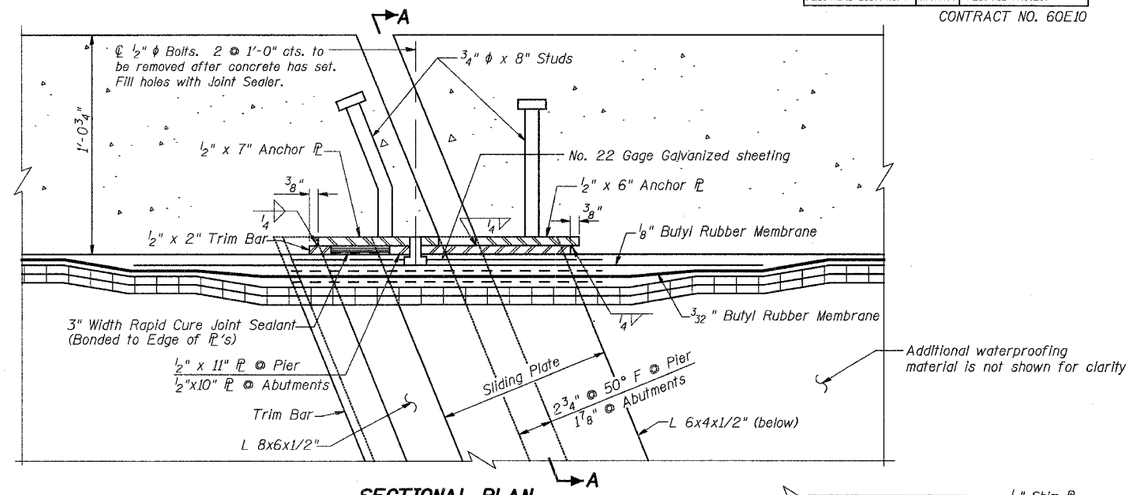

SECTIONAL PLAN
THRU BALLAST RETAINER

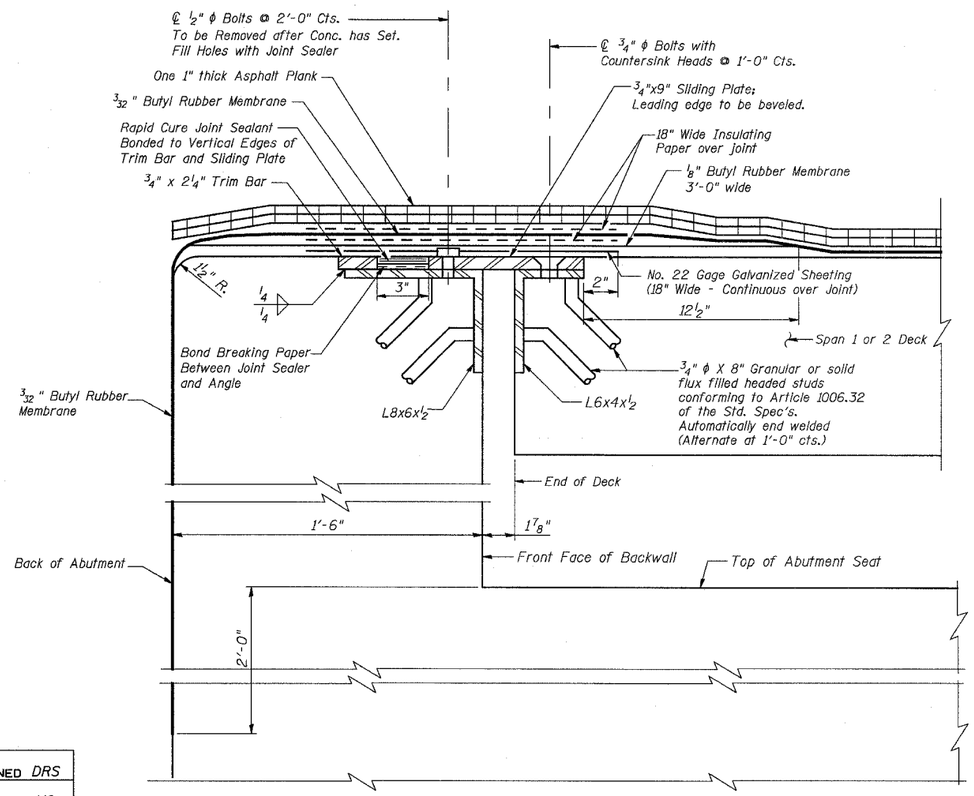

FIXED JOINT AT ABUTMENTS
(SECTION P-P)

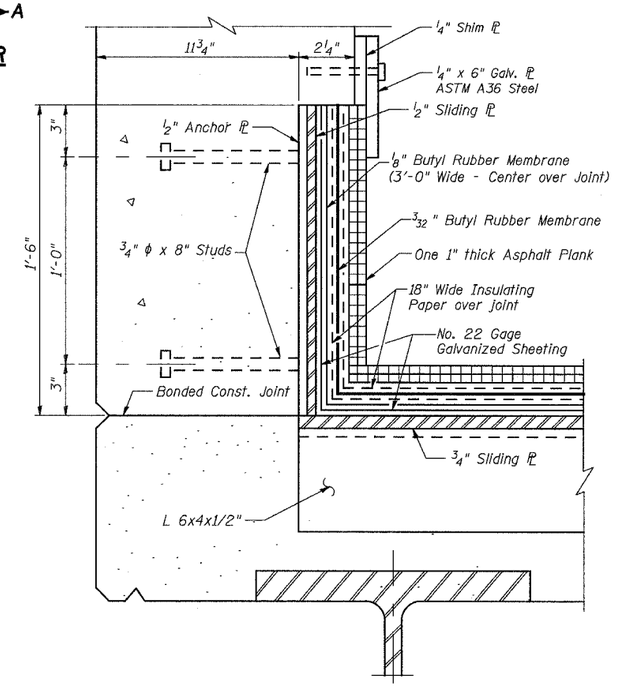

SECTION A-A

Notes:

1. The Waterproofing material at the joints at the Abutments and Pier shall be applied in the following order:
   (1) Bond-Breaker Paper
   (2) Rapid Cure Joint Sealant
   (3) Galvanized Sheet
   (4) 1/8" Thick Butyl Rubber Membrane
   (5) Insulating Paper
   (6) The 3/32" Thick Butyl Rubber Membrane
   (7) Insulating Paper
   (8) Asphalt Plank
   (9) Mop Coat of Hot Asphalt
   Material shall be included in cost of Membrane Waterproofing (Special)
2. Plates, angles & studs are included in cost of Furnishing & Erecting Structural Steel.
3. Steel Angles, Trim Bar, Studs and Sliding Plates shall be Hot Dip Galvanized after Fabrication per ASTM A123 (AASHTO M111). Countersunk Head Bolts shall be Galvanized per ASTM A153 (AASHTO M232).
4. For installation of joint material at Ballast Retainer supporting walkway, see Sheet 8 of 37.
5. For location of Sections P-P and Q-Q, see Sheet 5 of 37.

DESIGNED	DRS
CHECKED	JJG
DRAWN	DRS/SOI
CHECKED	JJG

URS
100 South Wacker Drive,
Suite 500
Chicago, IL 60606
(312) 939-1000

REVISIONS	
NAME	DATE

ILLINOIS DEPARTMENT OF TRANSPORTATION
US RTE 6 FROM I-294 TO IL RTE 1

DECK JOINTS

METRA & CN BRIDGE 20.6
OVER U.S. RTE. 6 (159TH STREET)

STATION 91+24.94 STRUCTURE NO. 016-2755
SCALE: DATE: 2/21/2008

g:\7049.069\structures\2755_w_rr\final design drwgs\07-deck joints.dgn 3/13/2008 9:24:42 AM