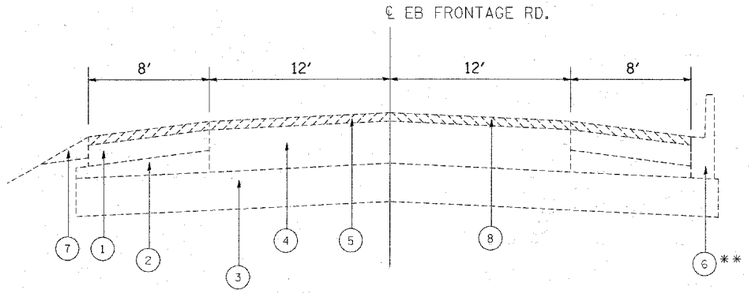

** REFER TO PLAN FOR LOCATIONS OF CURB & GUTTER

EXISTING TYPICAL SECTION
E/B ELGIN-O'HARE (FRONTAGE ROAD)

STA. 10+36 TO STA. 25+00
STA. 29+40 TO STA. 34+95
STA. 38+50 TO STA. 55+83

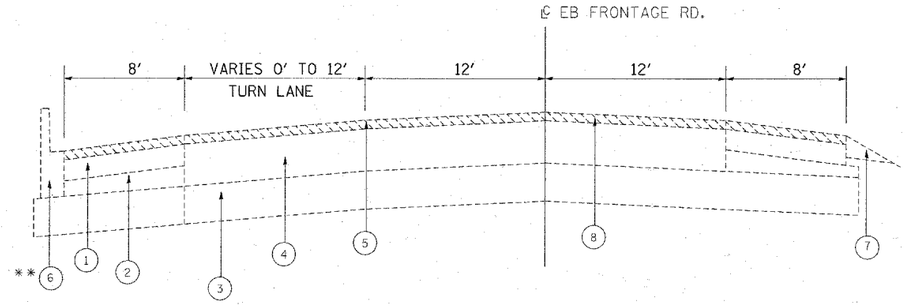

EXISTING TYPICAL SECTION
E/B ELGIN-O'HARE (FRONTAGE ROAD)

STA. 34+95 TO STA. 38+50
STA. 55+83 TO STA 59+21

**REFER TO PLAN FOR LOCATIONS OF CURB & GUTTER

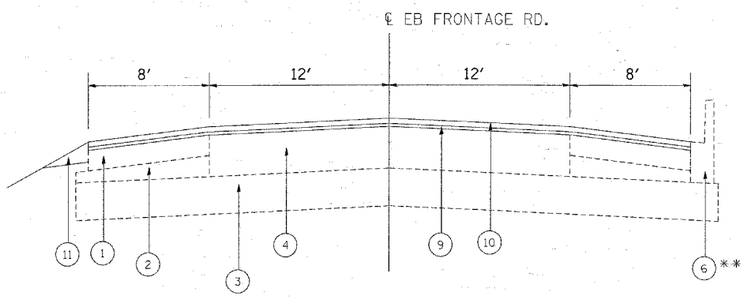

PROPOSED TYPICAL SECTION
E/B ELGIN-O'HARE (FRONTAGE ROAD)

STA. 10+36 TO STA. 25+00
STA. 29+40 TO STA. 34+95
STA. 38+50 TO STA. 55+83

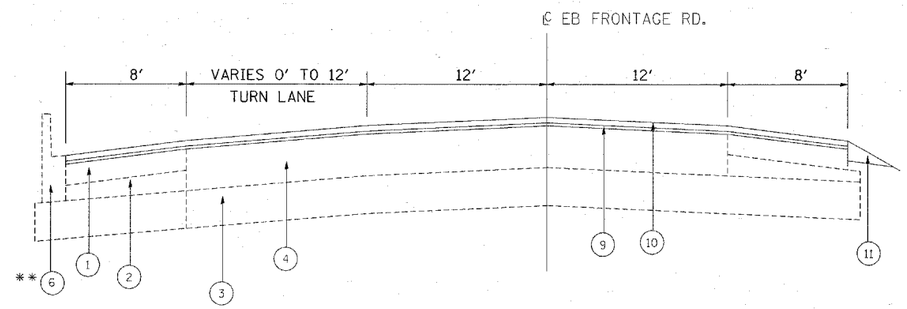

PROPOSED TYPICAL SECTION
E/B ELGIN-O'HARE (FRONTAGE ROAD)

STA. 34+95 TO STA. 38+50
STA. 55+83 TO STA 59+21

LEGEND

1. EXISTING HMA SHOULDER 8″
2. EXISTING SUB-BASE GRANULAR MATERIAL, TYPE B
3. EXISTING AGGREGATE SUBGRADE, 12″
4. EXISTING HMA BINDER COURSE, TYPE 2, 12″
5. EXISTING HMA SURFACE COURSE, 1 1/2″
6. EXISTING COMBINATION CONCRETE CURB AND GUTTER, TYPE B-6.24
7. EXISTING AGGREGATE SHOULDER TYPE B
8. PROSPOSED HOT-MIX ASPHALT SURFACE REMOVAL, 2 1/4″
9. PROPOSED POLYMERIZED LEVELING BINDER (MACHINE METHOD), IL-4.75, N50, 3/4″
10. PROPOSED HOT-MIX ASPHALT SURFACE COURSE, MIX "D", N70, 1 1/2″
11. PROPOSED AGGREGATE WEDGE SHOULDER, TYPE B

FILE NAME = c:\projects\d134708\d134708ea.dgn	USER NAME = banksl	DESIGNED -	REVISED -	STATE OF ILLINOIS DEPARTMENT OF TRANSPORTATION	ELGIN-O'HARE (FRONTAGE ROAD) TYPICAL SECTIONS	F.A.P. RTE.	SECTION	COUNTY	TOTAL SHEETS / SHEET NO.
		DRAWN -	REVISED -			345	16-2-1-K-RS	COOK	31 / 6
	PLOT SCALE = 50.0000 ' / IN.	CHECKED -	REVISED -					CONTRACT NO. 60E26	
	PLOT DATE = 4/1/2008	DATE -	REVISED -		SCALE: NTS / SHEET NO. OF SHEETS / STA. X TO STA. X	FED. ROAD DIST. NO. 1	ILLINOIS	FED. AID PROJECT	